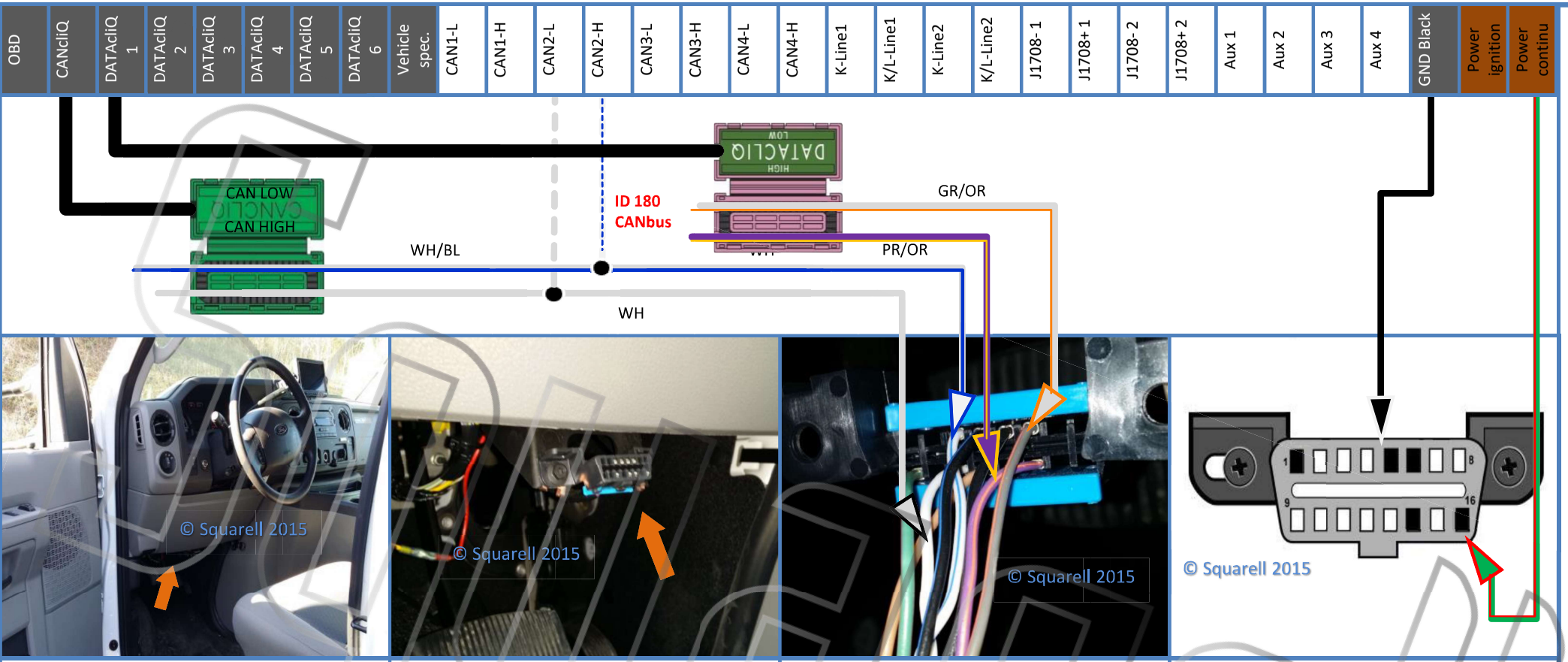

Location

Find the OBD connector at the lowest dashboard cover under the steering wheel.

Location

Location OBD connector.

CANbus

Untwist the Pink & White twisted wires from the OBD connector PIN 6 & 14.
Place the White/Blue wire in the CAN High Slot.
Place the White wire in the CAN Low slot.
Close CancliQ.

Secondary CANbus
Untwist Grey/Oranje wire and Grey/Orange wire (Pin 3 & 11).
Place Purple/Yellow wire in CAN High slot.
Place White wire in CAN Low slot.
Close DatacliQ (ID180).

Power + Ground

Connections at OBD connector.

Ground (KL31)
Pin 4/5 OBD connector Black wire.

Continuous Power (KL30)
Pin 16 OBD (Purple arrow)

Power on Ignition (KL15)
White/Orange wire under steering wheel.
(not in this picture)

Warning! CANcliQ or DatacliQ closes only once. Please repower the Squarell Device after the installation is completed. Please connect Squarell devices to a 10V to 30V power supply. Please use certified crimping tools to connect the wires.

Ford E350 2013-2015

Copyright © Squarell 2014

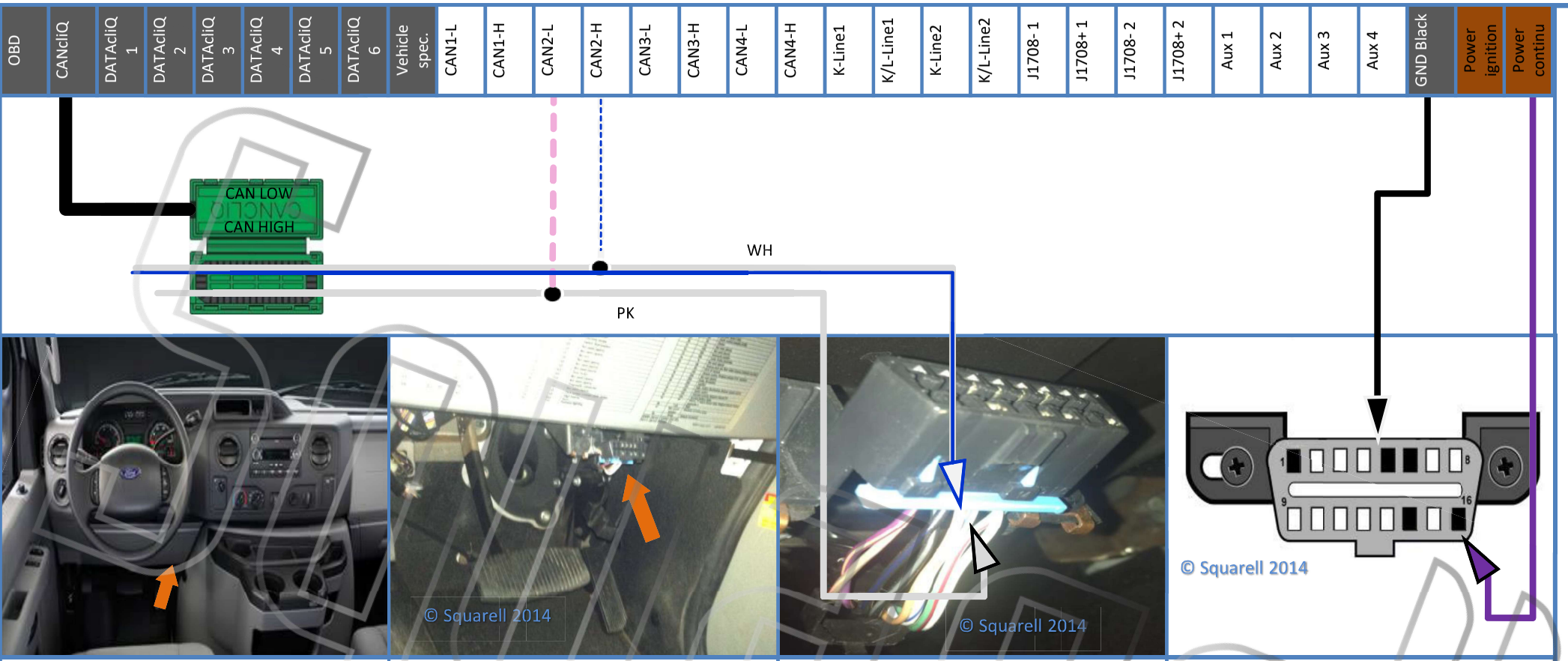

Location

Find the OBD connector at the lowest dashboard cover under the steering wheel.

Location OBD connector.

CANbus

Untwist the Pink & White twisted wires from the OBD connector PIN 6 & 14.
Place the White wire in the CAN High Slot.
Place the Pink wire in the CAN Low slot.
Close CANcliQ properly.

Power + Ground

Connections at OBD connector.

Ground (KL31)
Pin 4/5 OBD connector Black wire.

Continuous Power (KL30)
Pin 16 OBD (Purple arrow)

Power on Ignition (KL15)
Blue black wire at the back of the radio.

Warning! CANcliQ or DatacliQ closes only once. Please repower the Squarell Device after the installation is completed. Please connect Squarell devices to a 10V to 30V power supply. Please use certified crimping tools to connect the wires.

Ford E450 2008-2015

A B C D E F G H I J K L M N O P Q R S T U V W X Y Z

Copyright © Squarell 2014

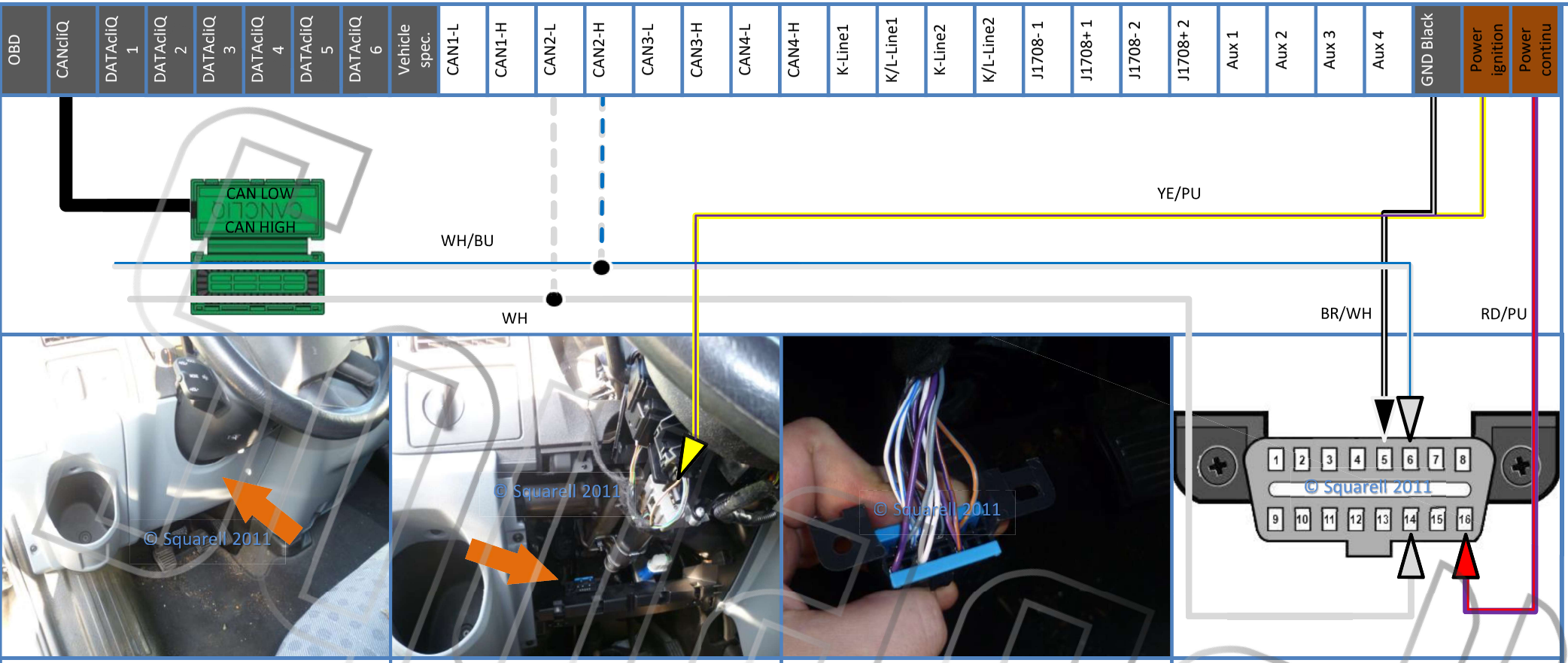

Location

At Driver side,
Remove the dashboard cap under the Steering Wheel.

Find the OBD Connector (Orange arrow).

CANbus

Untwist wires White/Blue and White
Place White/Blue wire in CAN High
Place White wire in CAN Low
Close CANcliQ.

Power + Ground

Connections at backside of the OBD connector.

Ground (KL31) :
Black/Grey wire (Black/Grey arrow)

Continuous Power (KL30) :
Purple/Red wire (Purple/Red arrow)

Power on Ignition (KL15) :
Yellow/Purple wire (Yellow/Purple arrow).

Warning! CANcliQ closes only once. Please connect Squarell devices to a 10V to 48V power supply. Please use certified crimping tools to connect the wires.

Ford Transit MK3 (facelift) 2006-2013

A B C D E F G H I J K L M N O P Q R S T U V W X Y Z

Copyright © Squarell 2010

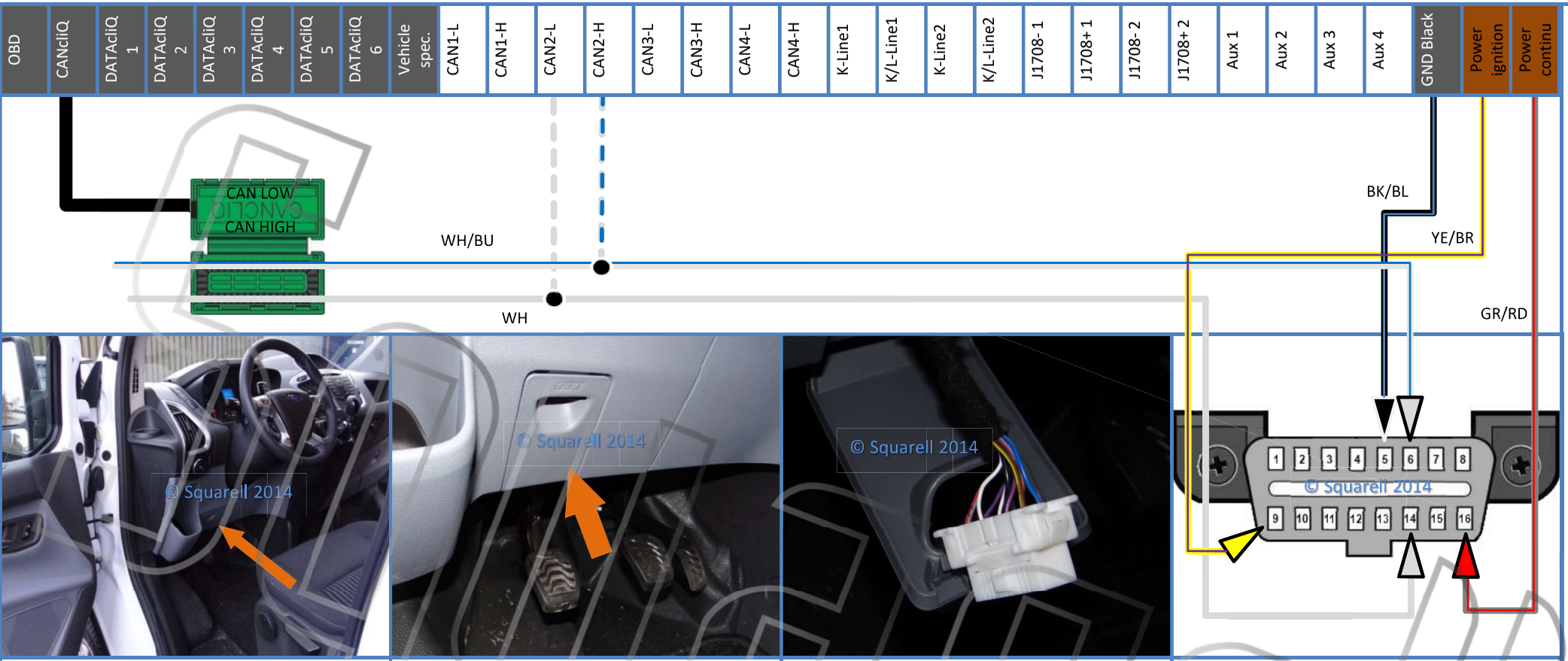

Location

Find the OBD connector under the cover plate with OBD. (see Orange arrow)

Euro 5 = white OBD connector (please use this manual)
Euro 6 = black OBD unit (please review euro 6 installation manual)

Find the OBD Connector (Orange arrow).

CANbus

Untwist wires White/Blue and White (Pin 6 & 14)
Place White/Blue wire in CAN High slot
Place White wire in CAN Low slot
Close CANcliQ.

For the Second CANbus Untwist Grey Orange & Purple Orange wires. (Pin 3 & 11)
Place Grey/Orange wire In DatacliQ CANHigh slot and Purple/Orange in DatacliQ CANlow slot.

Power + Ground

Connections at backside of the OBD connector.

Ground (KL31) :
Black/Blue trace wire (Black/Blue arrow)

Continuous Power (KL30) :
Grey/Red wire (Grey/Red arrow)

Power on Ignition (KL15) :
Brown/Yellow wire (Brown / Yellow arrow).

Warning! CANcliQ closes only once. Please connect Squarell devices to a 10V to 48V power supply. Please use certified crimping tools to connect the wires.

Ford Transit MK4 (euro5) 2013-2016

A B C D E F G H I J K L M N O P Q R S T U V W X Y Z

Copyright © Squarell 2014

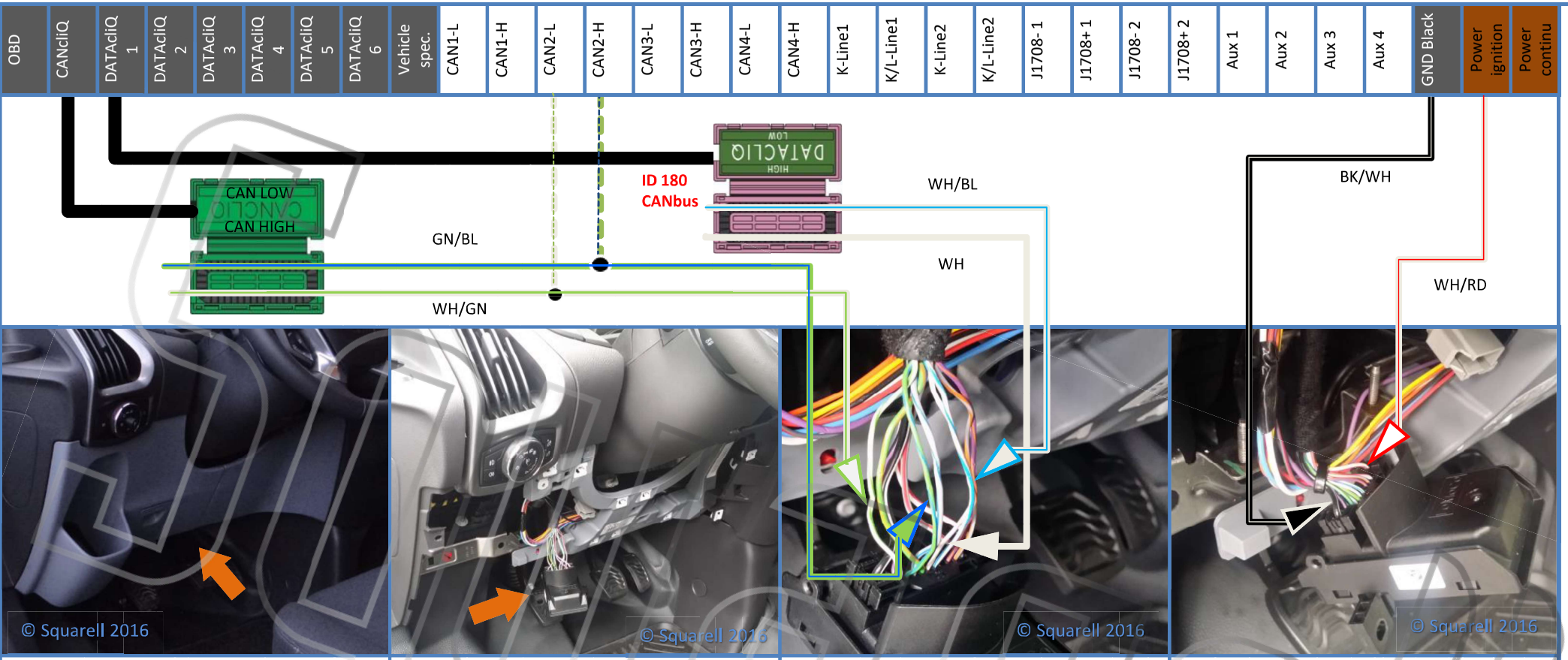

Location

Remove lower dashboard cover at drivers side to come to the OBD.

Euro 5 = white OBD connector (please review euro 5 installation manual)
Euro 6 = black OBD unit (please use this manual)

The connector at the backside of the OBD contains the CANbus lines.

Untwist the White/Green (pin 15) and Green/Blue (pin 16) wires.

Untwist the White (pin 19) and White/Blue (pin 20) wires.

Place the Green/Blue (pin 16) wire in CAN High slot.
Place the White/Green (pin 15) wire in CAN Low slot.
Close the CANcliQ.

Place the White/Blue wire (pin 20) in CAN High slot.
Place the White wire (pin 19) in CAN Low slot.
Close the DataCliQ (ID180).

Power + Ground
OBD backside connector

Ground (KL31) :
Pin 1 Black/White Wire

Power on ignition (KL15) :
Pin 13 White/Red wire.

Warning! CANcliQ or DatacliQ closes only once. Please repower the Squarell Device after the installation is completed. Please connect Squarell devices to a 10V to 30V power supply. Please use certified crimping tools to connect the wires.

Ford Transit MK4 (euro6) 2016 +

A B C D E F G H I J K L M N O P Q R S T U V W X Y Z

Copyright © Squarell 2016

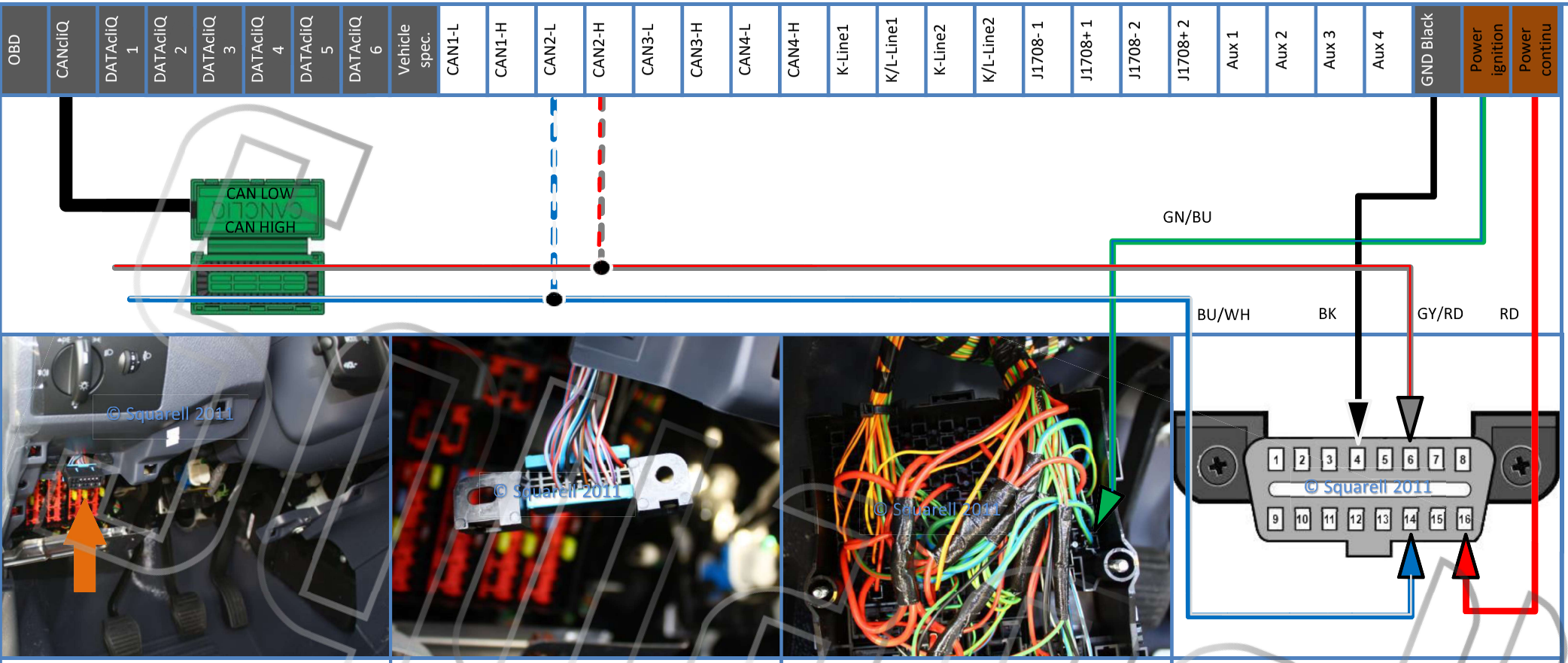

Location

At Driver side,
Left under the dashboard.
Remove the left dashboard cap.
Find the OBD (Orange arrow).

CANbus

Untwist wires at backside of the OBD connector (pin 6 & 14)
Place Grey/Red wire in CAN High
Place Blue/White wire in CAN Low
Close CANcliQ.

Power + Ground

Connections at backside of the OBD connector + Fuse box.

Power on Ignition (KL15) :
Green/blue wire (Green/blue arrow).

Ground (KL31) :
Black wire (Black arrow)

Continuous Power (KL30) :
Red wire (Red arrow)

Warning! CANcliQ closes only once. Please connect Squarell devices to a 10V to 48V power supply. Please use certified crimping tools to connect the wires.

Ford Transit Connect MK1 2006-2012

A B C D E F G H I J K L M N O P Q R S T U V W X Y Z

Copyright © Squarell 2010

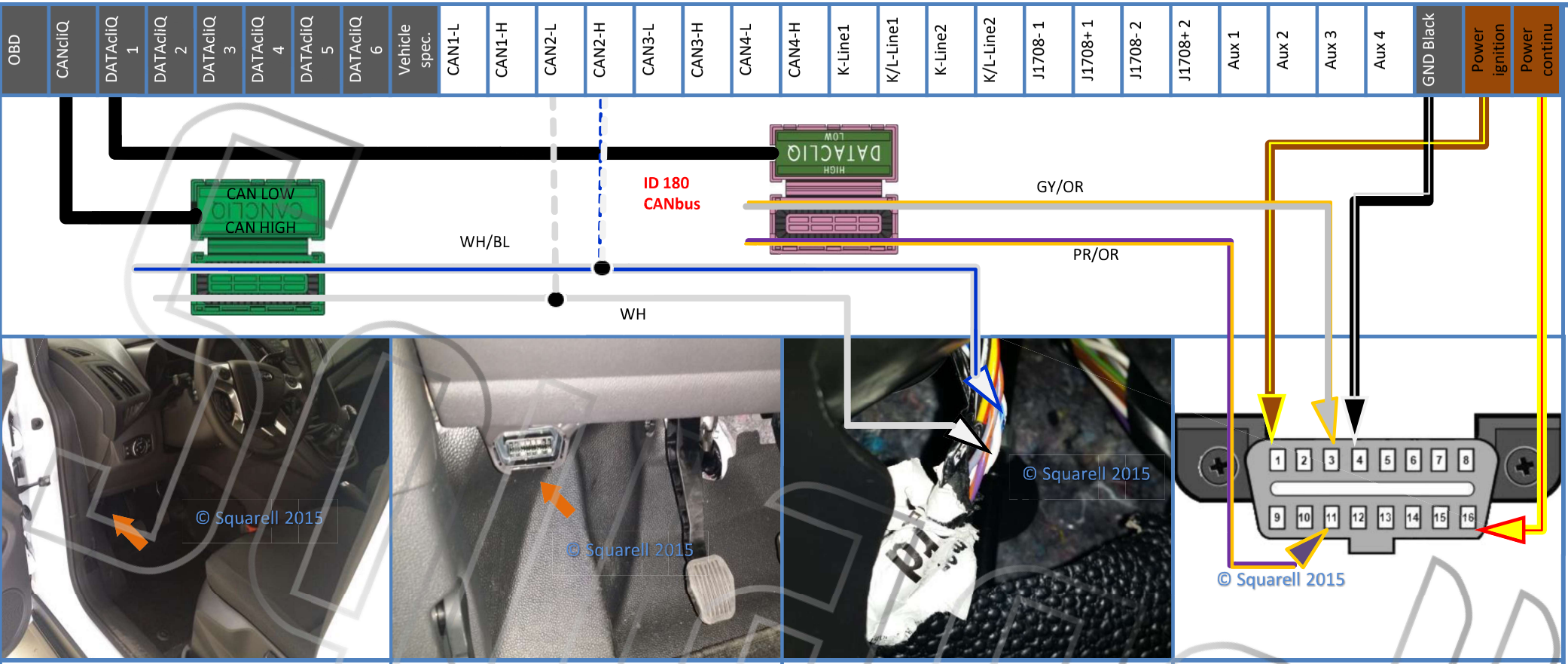

Location

Find the OBD connector located under the dashboard at the driver side.

At the back of the OBD connector you find the loom with the associated wires.

CANbus

Untwist White/Blue and White wires:

Place White Blue wire in CAN High slot.
Place White wire in CAN Low slot.
Close CANcliQ.

For the second CANbus please connect the DatacliQ to the Grey/Orange and Purple/Orange wires Pin 3 & 11.
Close DatacliQ. (ID180)

Power + Ground

Connections at backside of the OBD

Ground (KL31)
Pin 4/5 OBD connector (Brown arrow)

Continuous Power (KL30)
Pin 16 OBD connector (Yellow & Red arrow)

Power on Ignition (KL15)
Pin 1 OBD connector (Brown & Yellow arrow)

Warning! CANcliQ or DatacliQ closes only once. Please repower the Squarell Device after the installation is completed. Please connect Squarell devices to a 10V to 30V power supply. Please use certified crimping tools to connect the wires.

Ford Transit Connect MK2 2013 +

A B C D E F G H I J K L M N O P Q R S T U V W X Y Z

Copyright © Squarell 2015

Ford Transit Connect MK2 (euro6) 2016+

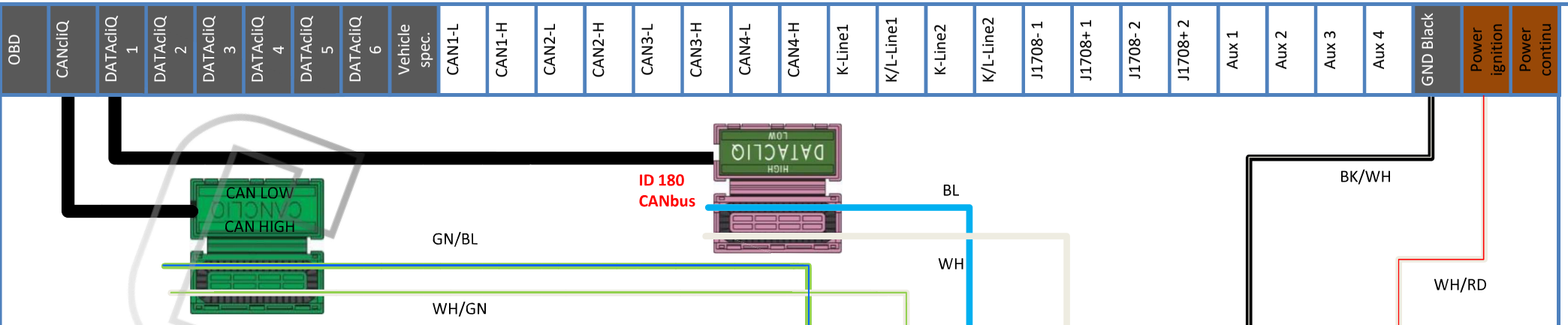

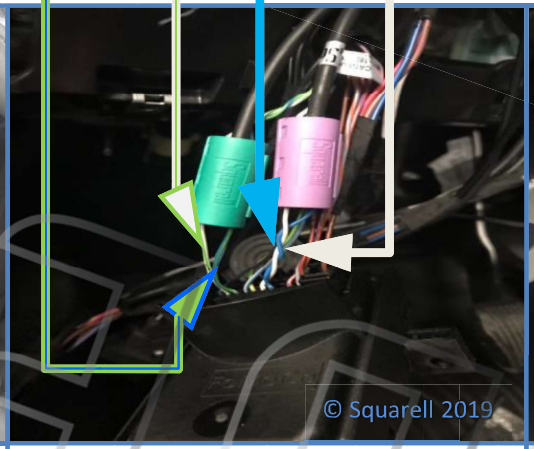

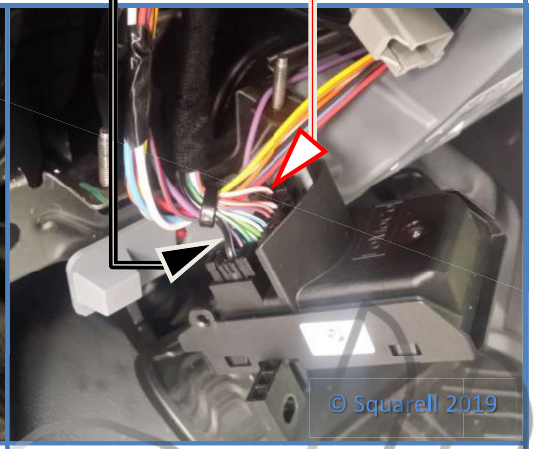

Location

Remove lower dashboard cover at drivers side to come to the OBD.

Euro 5 = white OBD connector (please review euro 5 installation manual)
Euro 6 = black OBD unit (please use this manual)

The connector at the backside of the OBD contains the CANbus lines.

Untwist the White/Green (pin 15) and Green/Blue (pin 16) wires.

Untwist the White (pin 19) and White/Blue (pin 20) wires.

Place the Green/Blue (pin 16) wire in CAN High slot.
Place the White/Green (pin 15) wire in CAN Low slot.
Close the CANcliQ.

Place the White/Blue wire (pin 20) in CAN High slot.
Place the White wire (pin 19) in CAN Low slot.
Close the DataCliQ (ID180).

Power + Ground
OBD backside connector

Ground (KL31) :
Pin 1 Black/White Wire

Power on ignition (KL15) :
Pin 13 White/Red wire.

Warning! CANcliQ or DatacliQ closes only once. Please repower the Squarell Device after the installation is completed. Please connect Squarell devices to a 10V to 30V power supply. Please use certified crimping tools to connect the wires.

Copyright © Squarell 2016

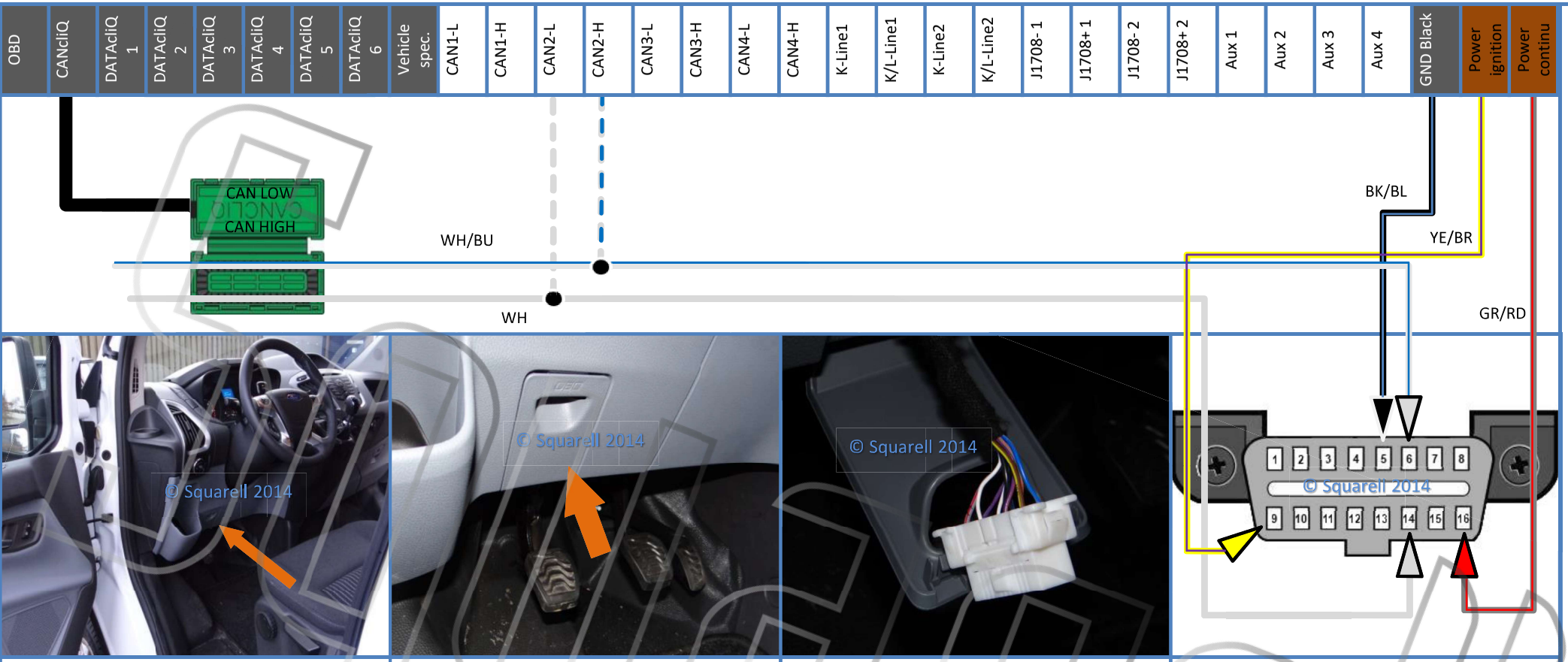

Location

Find the OBD connector under the cover plate with OBD. (see Orange arrow)

Euro 5 = white OBD connector (please use this manual)
Euro 6 = black OBD unit (please review euro 6 installation manual)

Find the OBD Connector (Orange arrow).

CANbus

Untwist wires White/Blue and White (Pin 6 & 14)
Place White/Blue wire in CAN High slot
Place White wire in CAN Low slot
Close CANcliQ.

Power + Ground

Connections at backside of the OBD connector.

Ground (KL31) :
Black/Blue trace wire (Black/Blue arrow)

Continuous Power (KL30) :
Grey/Red wire (Grey/Red arrow)

Power on Ignition (KL15) :
Brown/Yellow wire (Brown / Yellow arrow).

Warning! CANcliQ closes only once. Please connect Squarell devices to a 10V to 48V power supply. Please use certified crimping tools to connect the wires.

Ford Transit Custom MK1 (euro5) 2013-2016

Copyright © Squarell 2014

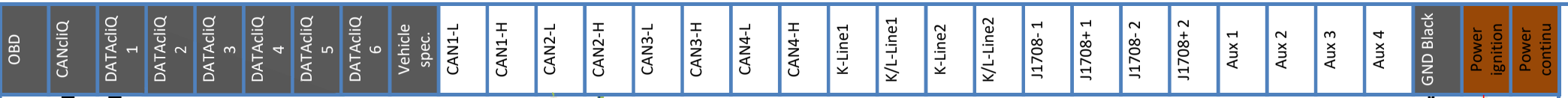

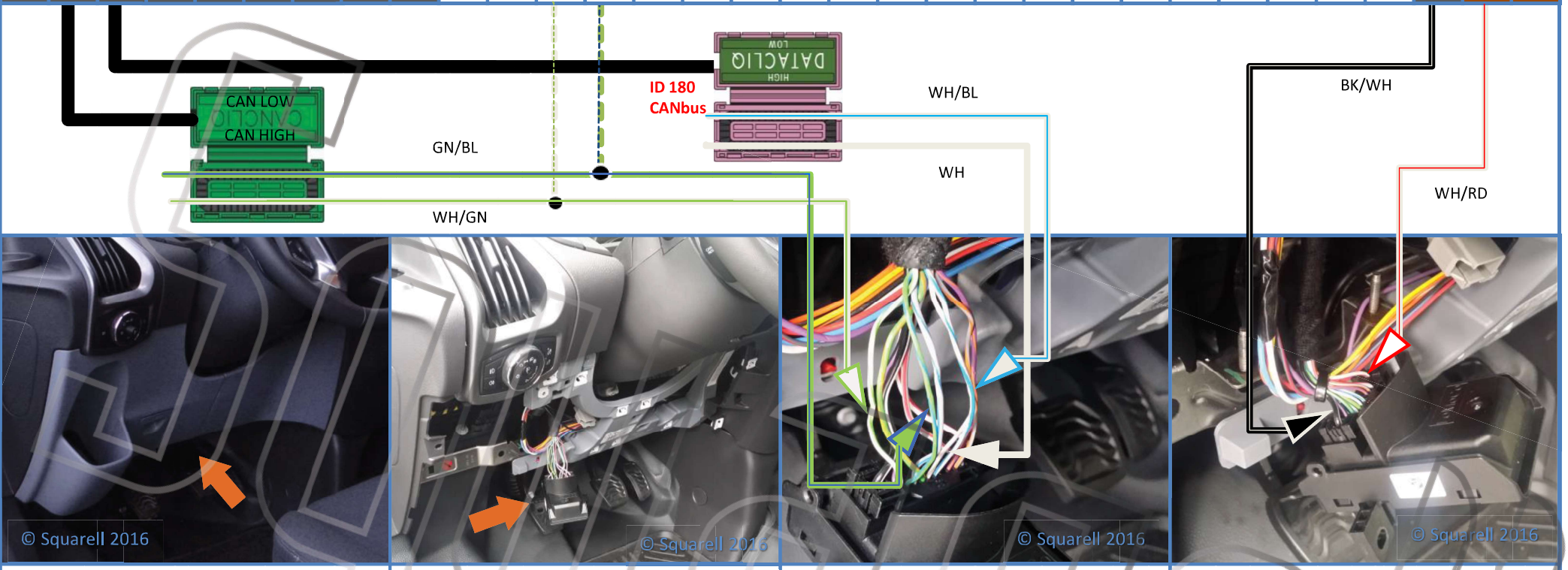

Location

Remove lower dashboard cover at drivers side to come to the OBD.

Euro 5 = white OBD connector (please review euro 5 installation manual)
Euro 6 = black OBD unit (please use this manual)

The connector at the backside of the OBD contains the CANbus lines.

Untwist the White/Green (pin 15) and Green/Blue (pin 16) wires.

Untwist the White (pin 19) and White/Blue (pin 20) wires.

Place the Green/Blue (pin 16) wire in CAN High slot.
Place the White/Green (pin 15) wire in CAN Low slot.
Close the CANcliQ.

Place the White/Blue wire (pin 20) in CAN High slot.
Place the White wire (pin 19) in CAN Low slot.
Close the DataCliQ (ID180).

Power + Ground
OBD backside connector

Ground (KL31) :
Pin 1 Black/White Wire

Power on ignition (KL15) :
Pin 13 White/Red wire.

Warning! CANcliQ or DatacliQ closes only once. Please repower the Squarell Device after the installation is completed. Please connect Squarell devices to a 10V to 30V power supply. Please use certified crimping tools to connect the wires.

Ford Transit Custom MK1 (euro6) 2016+

A B C D E F G H I J K L M N O P Q R S T U V W X Y Z

Copyright © Squarell 2016