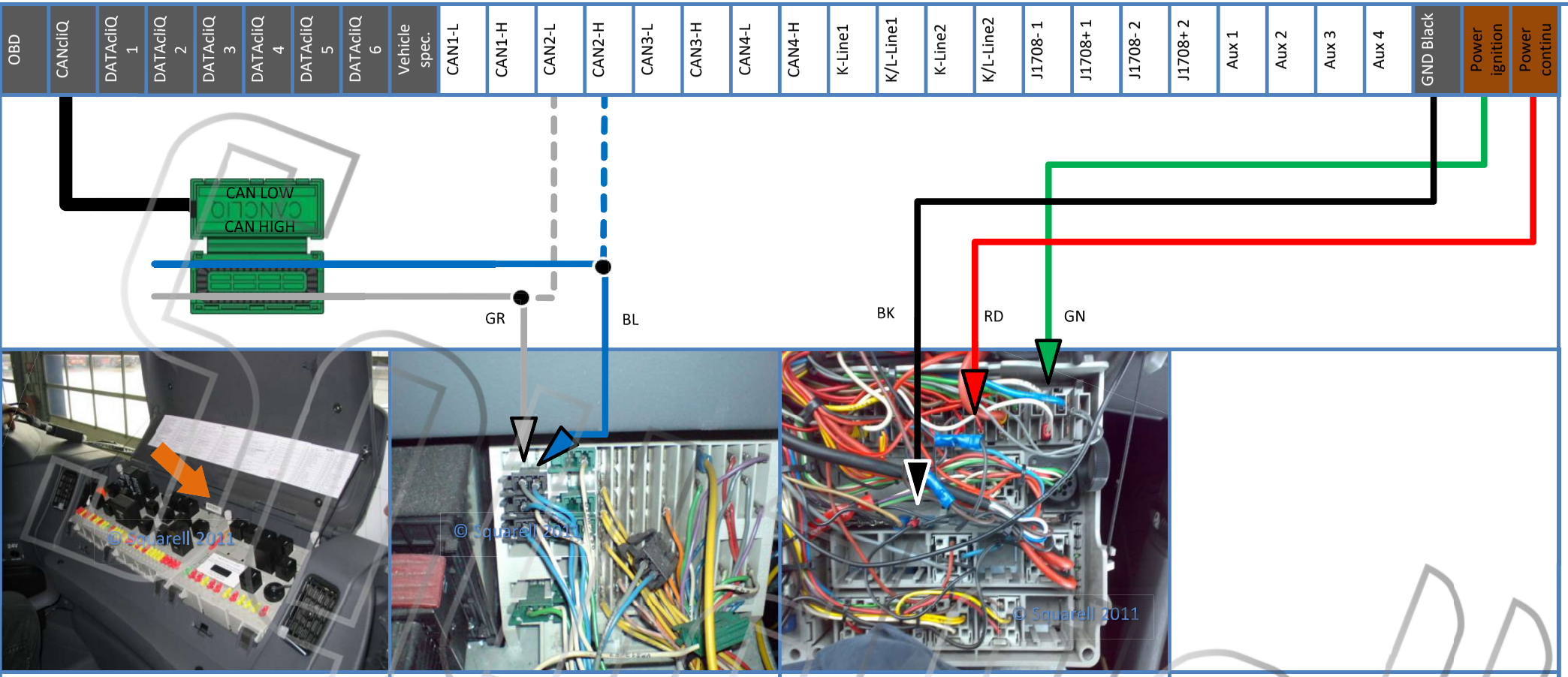

Location

At passenger side
Open fusebox
Remove 2 screws
Turn open Fusebox

CANbus

Find in the middle of the area under need the fuse box the Black connector with twisted Grey and Blue wires.

Untwist Grey and Blue wires.
place Scania Blue wire in CAN High
place Scania Grey wire in CAN Low
Close CANcliQ.

Power + Ground

Connections at backside of fuse box.

Ground (KL31) :
Free terminals. (black arrow)

Continuous Power (KL30) :
Fuse location number 40/41 (Red arrow).

Power on Ignition (KL15) :
Fuse location number 44/45 (Green arrow).

Warning! CANcliQ or DatacliQ closes only once. Please repower the Squarell Device after the installation is completed. Please connect Squarell devices to a 10V to 48V power supply. Please use certified crimping tools to connect the wires.
This vehicle type is not supporting the Vehicle Distance (Odometer), Total Fuel Used and the Fuel Level on the Direct CANbus. Squarell unit will start counting the Vehicle Distance (Odometer) and the Total Fuel Used since the installation.

Scania 4-Series 1995-1999

A B C D E F G H I J K L M N O P Q R S T U V W X Y Z

Copyright © Squarell 2011

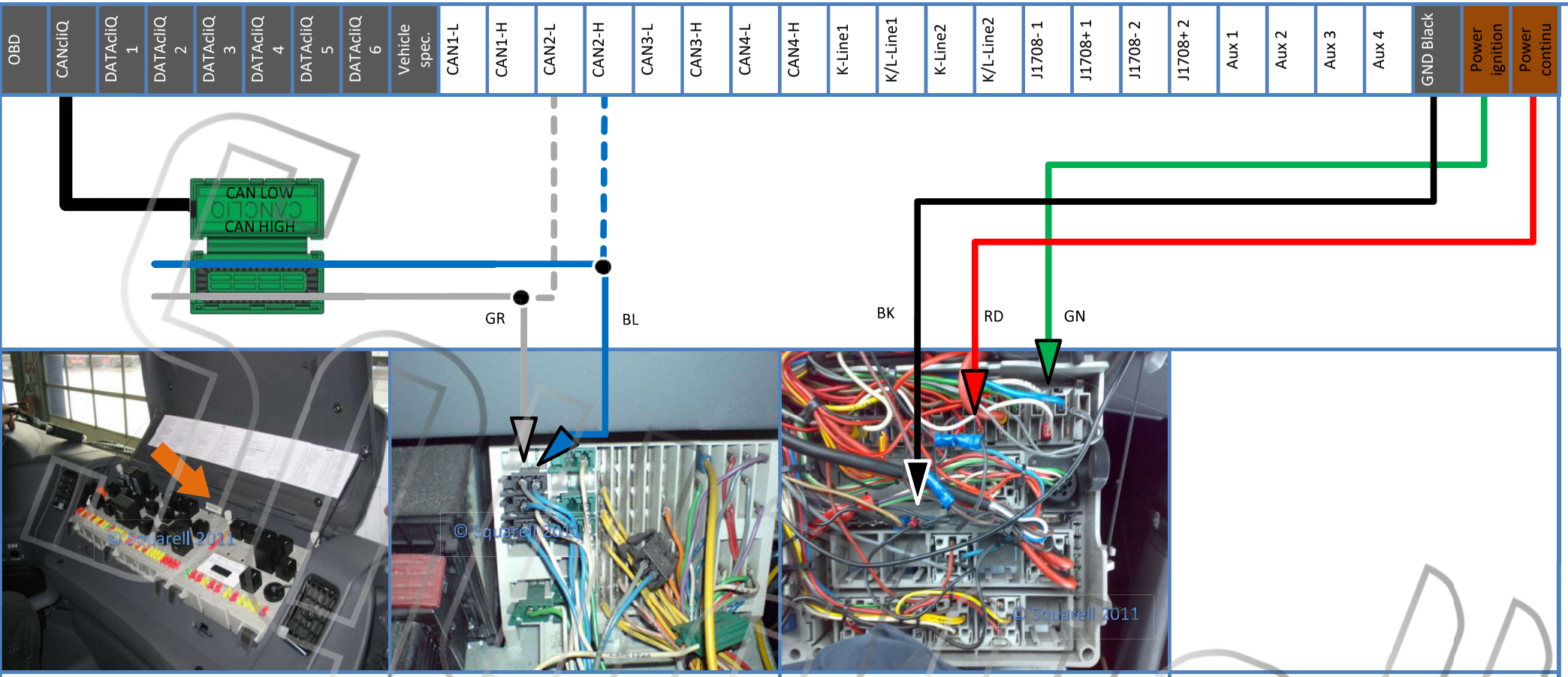

Location

At passenger side
Open fusebox
Remove 2 screws
Turn open Fusebox

CANbus

Find in the middle of the area under need the fuse box the Black connector with twisted Grey and Blue wires.

Untwist Grey and Blue wires.
place Scania Blue wire in CAN High
place Scania Grey wire in CAN Low
Close CANcliQ.

Power + Ground

Connections at backside of fuse box.

Ground (KL31) :
Free terminals. (black arrow)

Continuous Power (KL30) :
Fuse location number 40/41 (Red arrow).

Power on Ignition (KL15) :
Fuse location number 44/45 (Green arrow).

Warning! CANcliQ or DatacliQ closes only once. Please repower the Squarell Device after the installation is completed. Please connect Squarell devices to a 10V to 48V power supply. Please use certified crimping tools to connect the wires.
This vehicle type is not supporting the Vehicle Distance (Odometer), Total Fuel Used and the Fuel Level on the Direct CANbus. Squarell unit will start counting the Vehicle Distance (Odometer) and the Total Fuel Used since the installation.

Scania 4-Series 2000-2004

Copyright © Squarell 2011

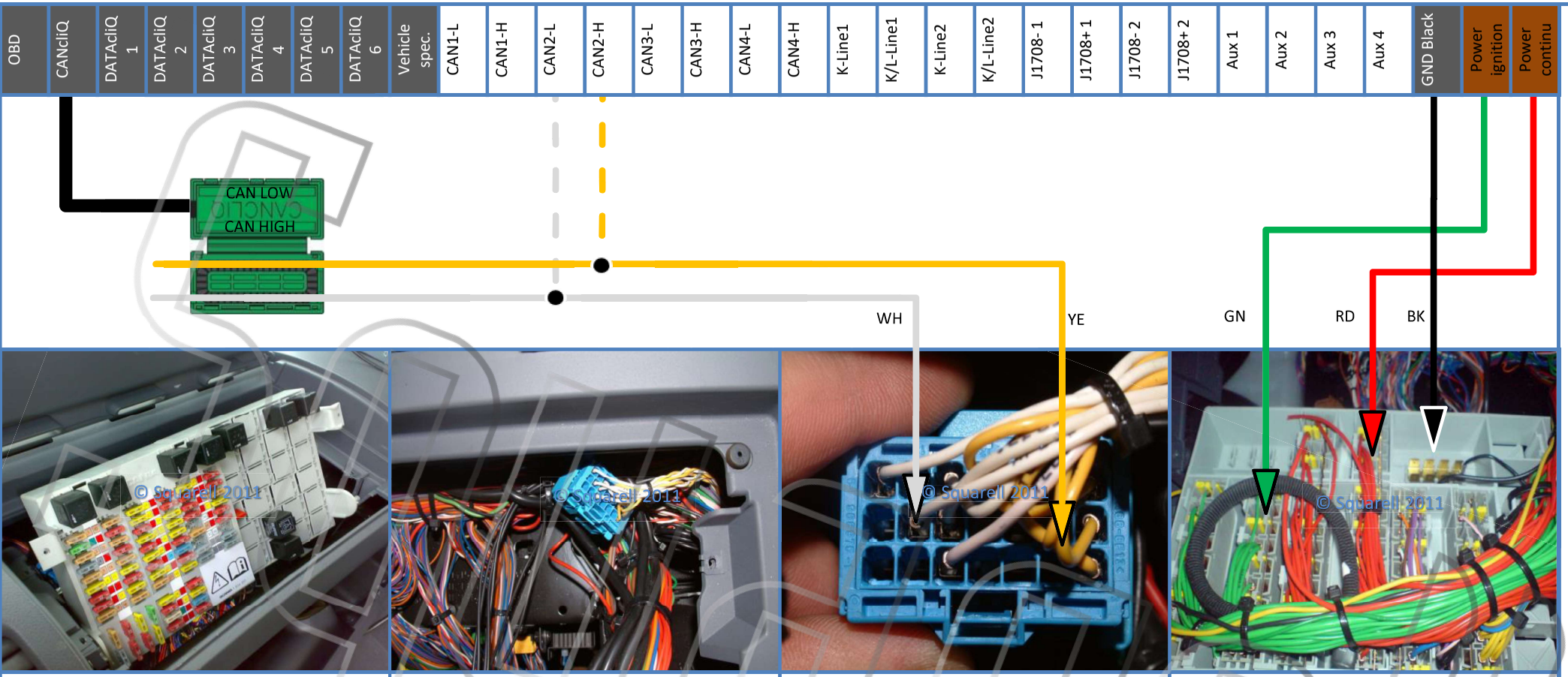

Location

At passenger side
Open fusebox
Remove 2 screws
Turn open Fusebox

Blue connector at door side with twisted Yellow and White wires. Connector can be hidden inside wiring loom.

CANbus

Untwist White and Yellow wires,
Place Scania Yellow wire in CAN High slot
Place Scania White wire in CAN Low slot
Close CANcliQ.

Power + Ground

Connections at backside of fuse box.

Ground (KL31) :
Free terminals. (black arrow)

Continuous Power (KL30) :
Free terminals with Red wires (Red arrow).

Power on Ignition (KL15) :
Free terminals with Green wires (Green arrow).

Warning! CANcliQ or DatacliQ closes only once. Please repower the Squarell Device after the installation is completed. Please connect Squarell devices to a 10V to 48V power supply. Please use certified crimping tools to connect the wires.

Scania G-Series (1st gen) 2007-2009

A B C D E F G H I J K L M N O P Q R S T U V W X Y Z

Copyright © Squarell 2012

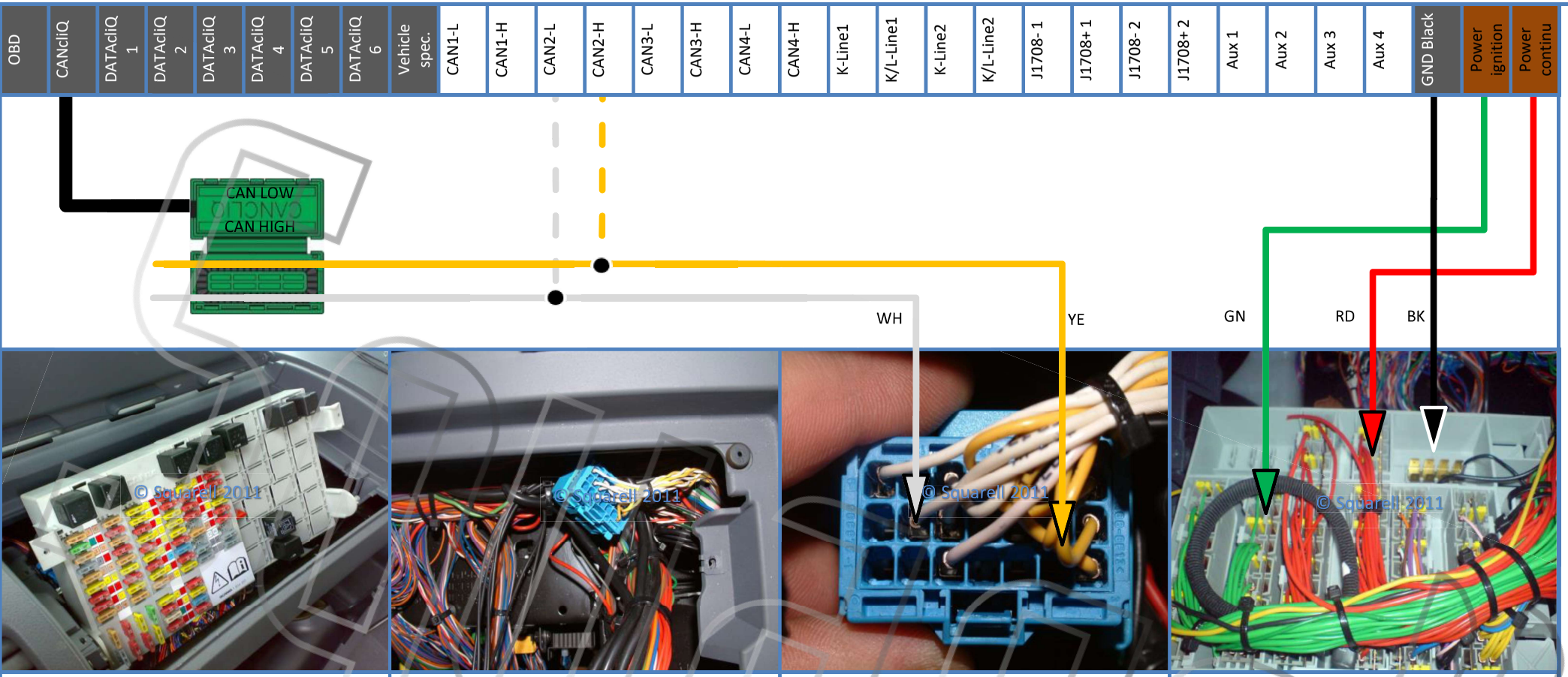

Location

At passenger side
Open fusebox
Remove 2 screws
Turn open Fusebox

Blue connector at door side with twisted Yellow and White wires. Connector can be hidden inside wiring loom.

CANbus

Untwist White and Yellow wires,
Place Scania Yellow wire in CAN High slot
Place Scania White wire in CAN Low slot
Close CANcliQ.

*Any White or Yellow can be used as they are all connected in the connector.

Power + Ground

Connections at backside of fuse box.

Ground (KL31) :
Free terminals. (black arrow)

Continuous Power (KL30) :
Free terminals with Red wires (Red arrow).

Power on Ignition (KL15) :
Free terminals with Green wires (Green arrow).

Warning! CANcliQ or DatacliQ closes only once. Please repower the Squarell Device after the installation is completed. Please connect Squarell devices to a 10V to 48V power supply. Please use certified crimping tools to connect the wires.

Scania G-Series (1st gen Facelift) 2010-2016

A B C D E F G H I J K L M N O P Q R S T U V W X Y Z

Copyright © Squarell 2012

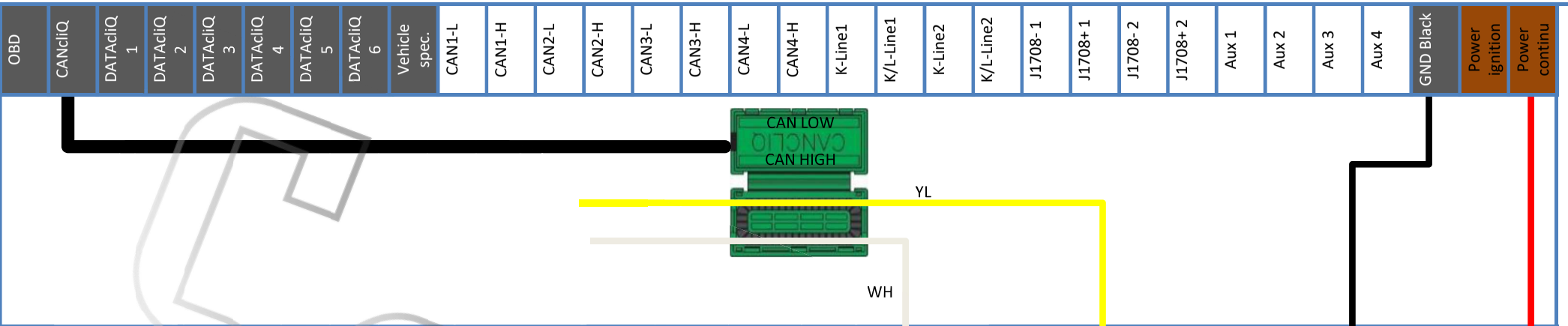

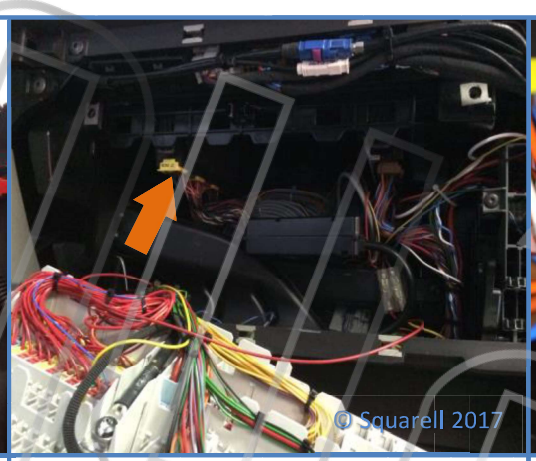

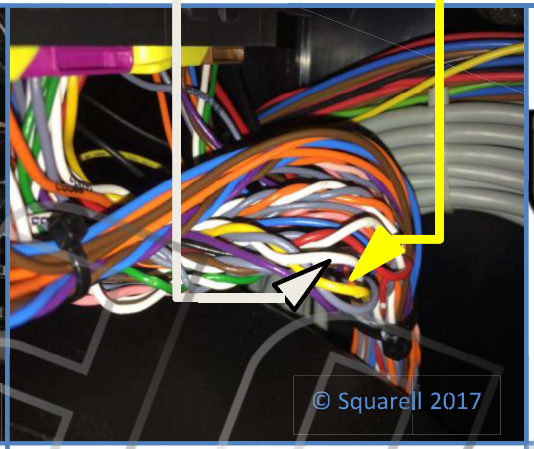

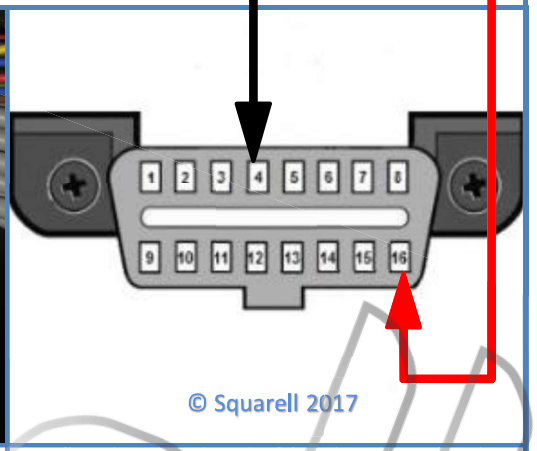

Location

Find the CAN-bus wires at the passenger side. Located behind the fuse box. Which is behind the dashboard cover. Remove the lower dashboard cover (Orange arrow).

Remove the lower dashboard panel to gain access to the fuse box.
Remove the fuse box to gain access to the COO Module (E30).

Module: COO (E30). (Orange arrow)
Connector: B
Pin CAN High: B-2 (Yellow)
Pin CAN Low: B-11 (White)

CANbus

Untwist the pin B-2 Yellow and B-11 White wires from the COO Module.

Place the Yellow wire from pin B-2 in the CAN High Slot.
Place the White wire from pin B-11 in the CAN Low slot.

Close the CANcliQ housing.

Power + Ground
Connections in OBD connector

Ground (KL31) :
OBD connector pin 4 and pin 5

Continuous Power (KL30) :
Pin 16 OBD connector

Warning! CANcliQ or DatacliQ closes only once. Please repower the Squarell Device after the installation is completed. Please connect Squarell devices to a 10V to 30V power supply. Please use certified crimping tools to connect the wires.

Scania G-series (2nd gen) 2016+

Copyright © Squarell 2016

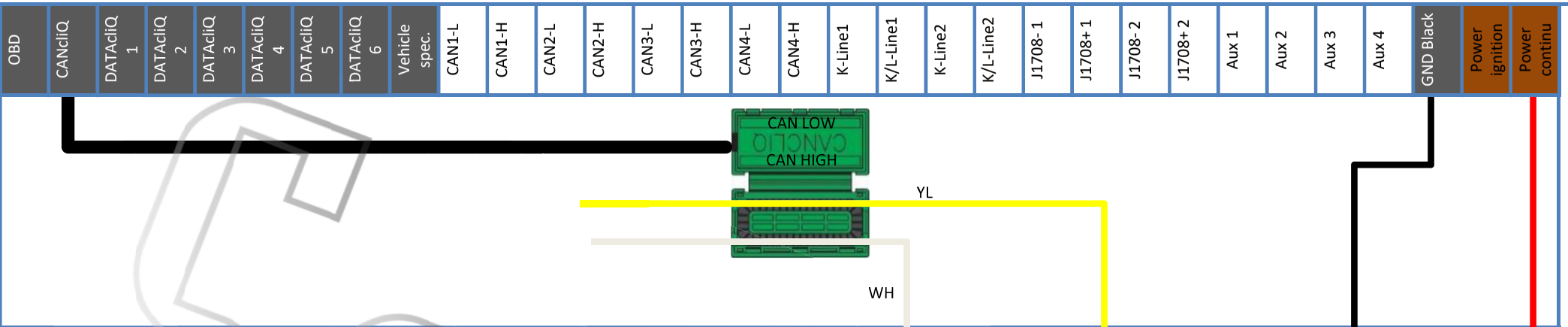

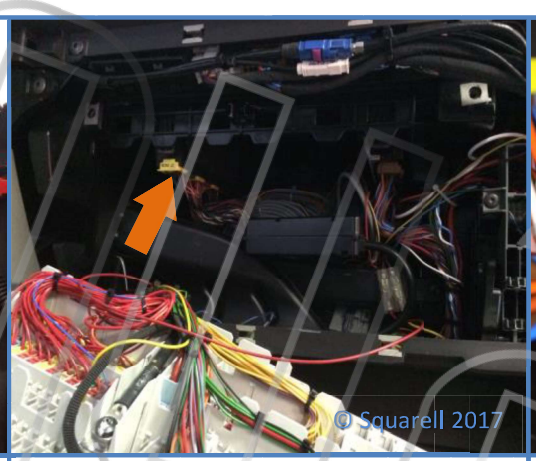

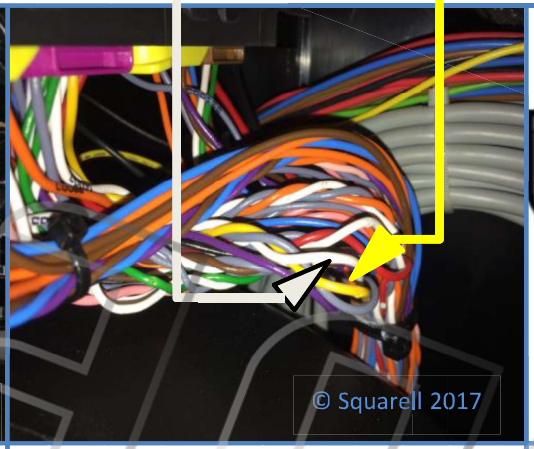

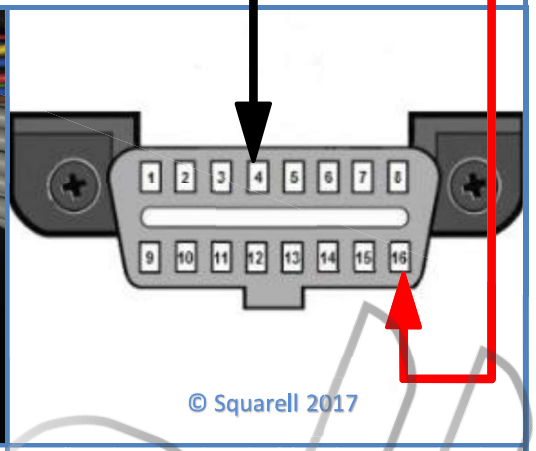

Location

Find the CAN-bus wires at the passenger side. Located behind the fuse box. Which is behind the dashboard cover. Remove the lower dashboard cover (Orange arrow).

Remove the lower dashboard panel to gain access to the fuse box.
Remove the fuse box to gain access to the COO Module (E30).

Module: COO (E30). (Orange arrow)
Connector: B
Pin CAN High: B-2 (Yellow)
Pin CAN Low: B-11 (White)

CANbus

Untwist the pin B-2 Yellow and B-11 White wires from the COO Module.

Place the Yellow wire from pin B-2 in the CAN High Slot.
Place the White wire from pin B-11 in the CAN Low slot.

Close the CANcliQ housing.

Power + Ground
Connections in OBD connector

Ground (KL31) :
OBD connector pin 4 and pin 5

Continuous Power (KL30) :
Pin 16 OBD connector

Warning! CANcliQ or DatacliQ closes only once. Please repower the Squarell Device after the installation is completed. Please connect Squarell devices to a 10V to 30V power supply. Please use certified crimping tools to connect the wires.

Scania L-series (1st gen) 2018+

Copyright © Squarell 2016

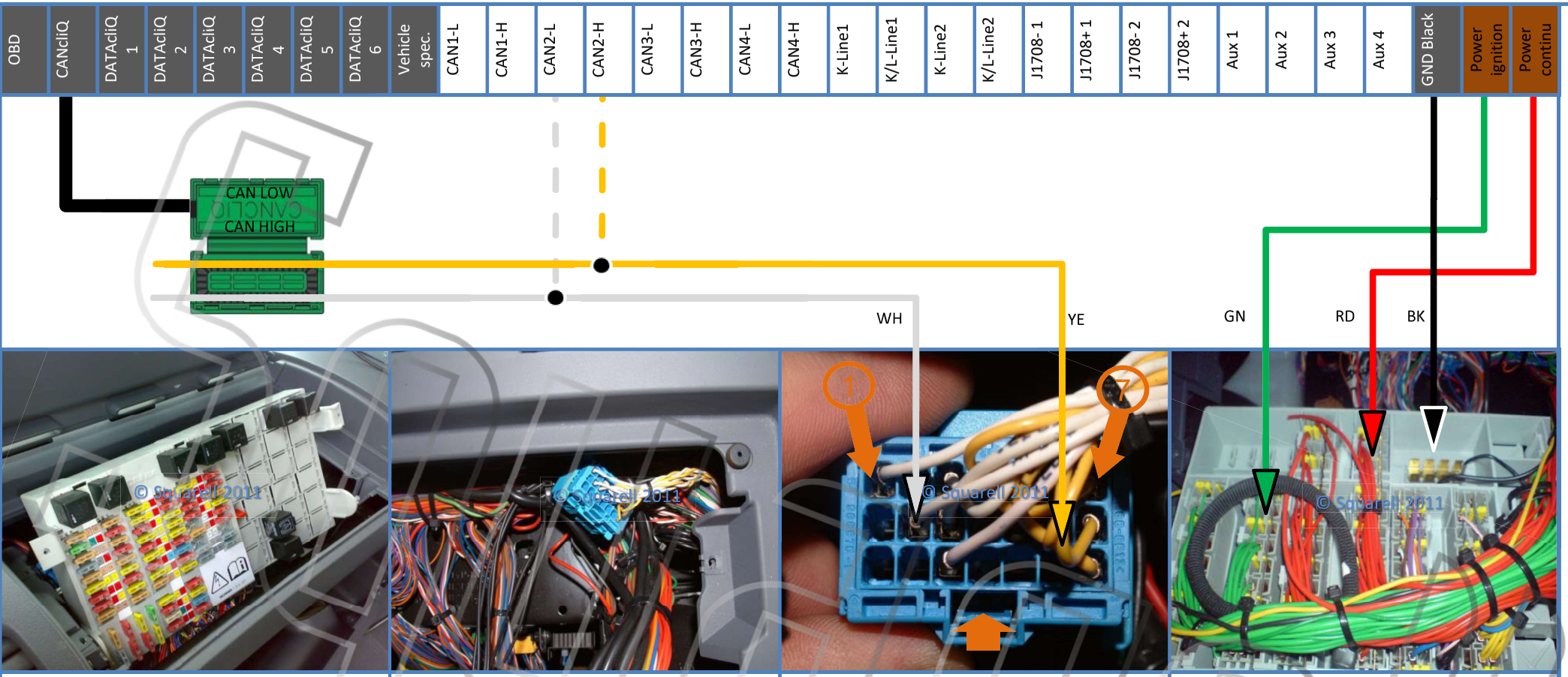

Location

At passenger side
Open fusebox
Remove 2 screws
Turn open Fusebox

Blue connector at door side with twisted Yellow and White wires. Connector can be hidden inside wiring loom.

CANbus

Untwist White and Yellow wires,
Place Scania Yellow wire in CAN High slot
Place Scania White wire in CAN Low slot
Close CANcliQ.

For Direct Connections:
Unlock connector slide by a screwdriver at orange arrow and place the wires to the free terminal on
Column 1 to 3 CAN Low (white)
Column 5 to 7 CAN High (yellow)

Power + Ground

Connections at backside of fuse box.

Ground (KL31) :
Free terminals. (black arrow)

Continuous Power (KL30) :
Free terminals with Red wires (Red arrow).

Power on Ignition (KL15) :
Free terminals with Green wires (Green arrow).

Warning! CANcliQ or DatacliQ closes only once. Please repower the Squarell Device after the installation is completed. Please connect Squarell devices to a 10V to 48V power supply. Please use certified crimping tools to connect the wires.

Scania P-Series (1st gen) 2005-2009

A B C D E F G H I J K L M N O P Q R S T U V W X Y Z

Copyright © Squarell 2012

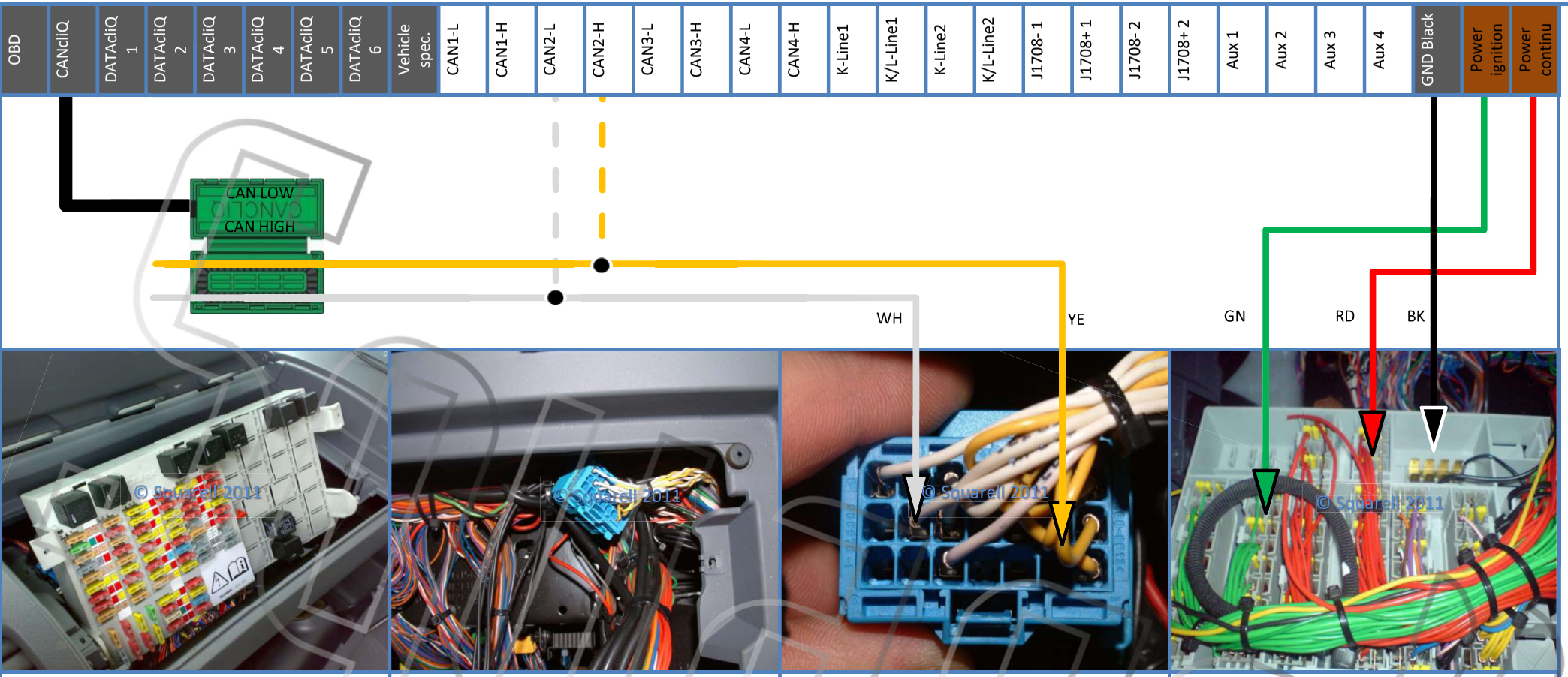

Location

At passenger side
Open fusebox
Remove 2 screws
Turn open Fusebox

Blue connector at door side with twisted Yellow and White wires. Connector can be hidden inside wiring loom.

CANbus

Untwist White and Yellow wires,
Place Scania Yellow wire in CAN High slot
Place Scania White wire in CAN Low slot
Close CANcliQ.

*Any White or Yellow can be used as they are all connected in the connector.

Power + Ground

Connections at backside of fuse box.

Ground (KL31) :
Free terminals. (black arrow)

Continuous Power (KL30) :
Free terminals with Red wires (Red arrow).

Power on Ignition (KL15) :
Free terminals with Green wires (Green arrow).

Warning! CANcliQ or DatacliQ closes only once. Please repower the Squarell Device after the installation is completed. Please connect Squarell devices to a 10V to 48V power supply. Please use certified crimping tools to connect the wires.

Scania P-Series (1st gen Facelift) 2010+

A B C D E F G H I J K L M N O P Q R S T U V W X Y Z

Copyright © Squarell 2012

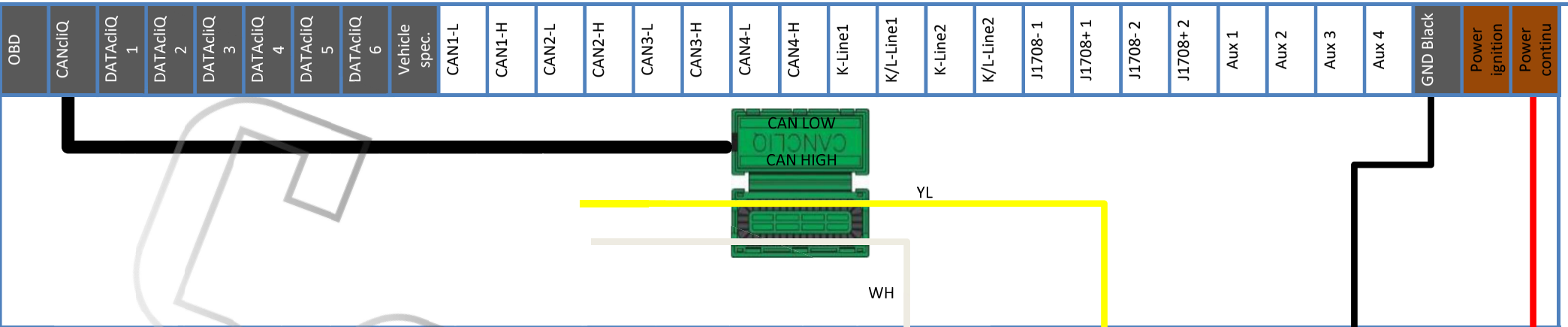

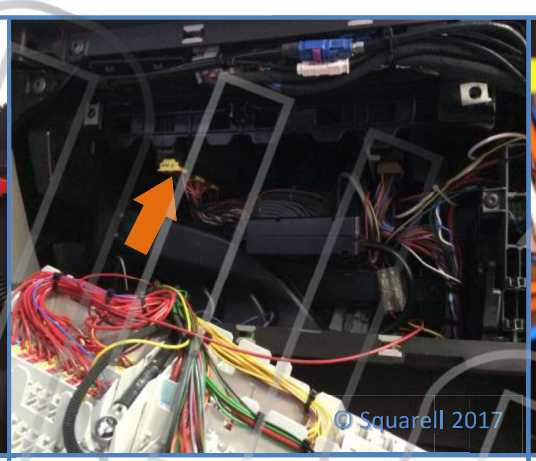

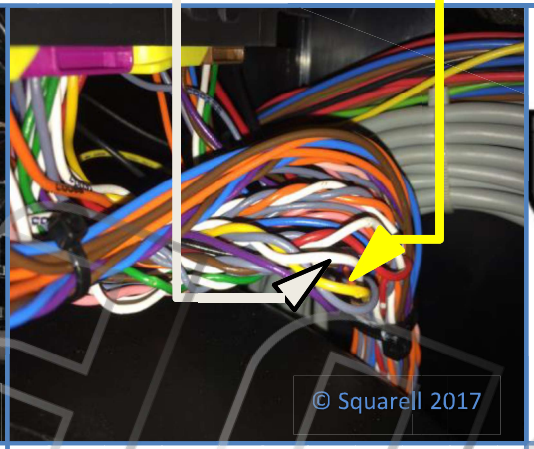

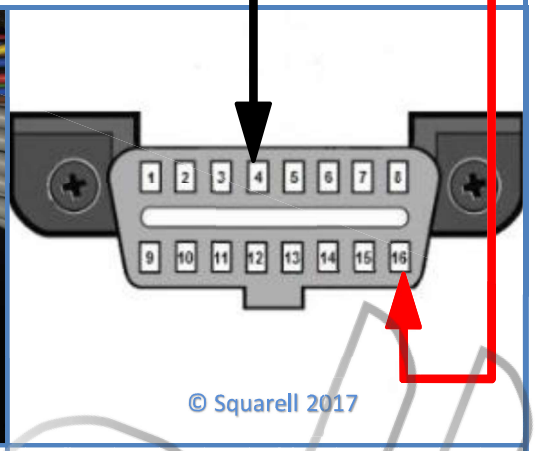

Location

Find the CAN-bus wires at the passenger side. Located behind the fuse box. Which is behind the dashboard cover. Remove the lower dashboard cover (Orange arrow).

Remove the lower dashboard panel to gain access to the fuse box.
Remove the fuse box to gain access to the COO Module (E30).

Module: COO (E30). (Orange arrow)
Connector: B
Pin CAN High: B-2 (Yellow)
Pin CAN Low: B-11 (White)

CANbus

Untwist the pin B-2 Yellow and B-11 White wires from the COO Module.

Place the Yellow wire from pin B-2 in the CAN High Slot.
Place the White wire from pin B-11 in the CAN Low slot.

Close the CANcliQ housing.

Power + Ground
Connections in OBD connector

Ground (KL31) :
OBD connector pin 4 and pin 5

Continuous Power (KL30) :
Pin 16 OBD connector

Warning! CANcliQ or DatacliQ closes only once. Please repower the Squarell Device after the installation is completed. Please connect Squarell devices to a 10V to 30V power supply. Please use certified crimping tools to connect the wires.

Scania P-series (2nd gen) 2016+

A B C D E F G H I J K L M N O P Q R S T U V W X Y Z

Copyright © Squarell 2016

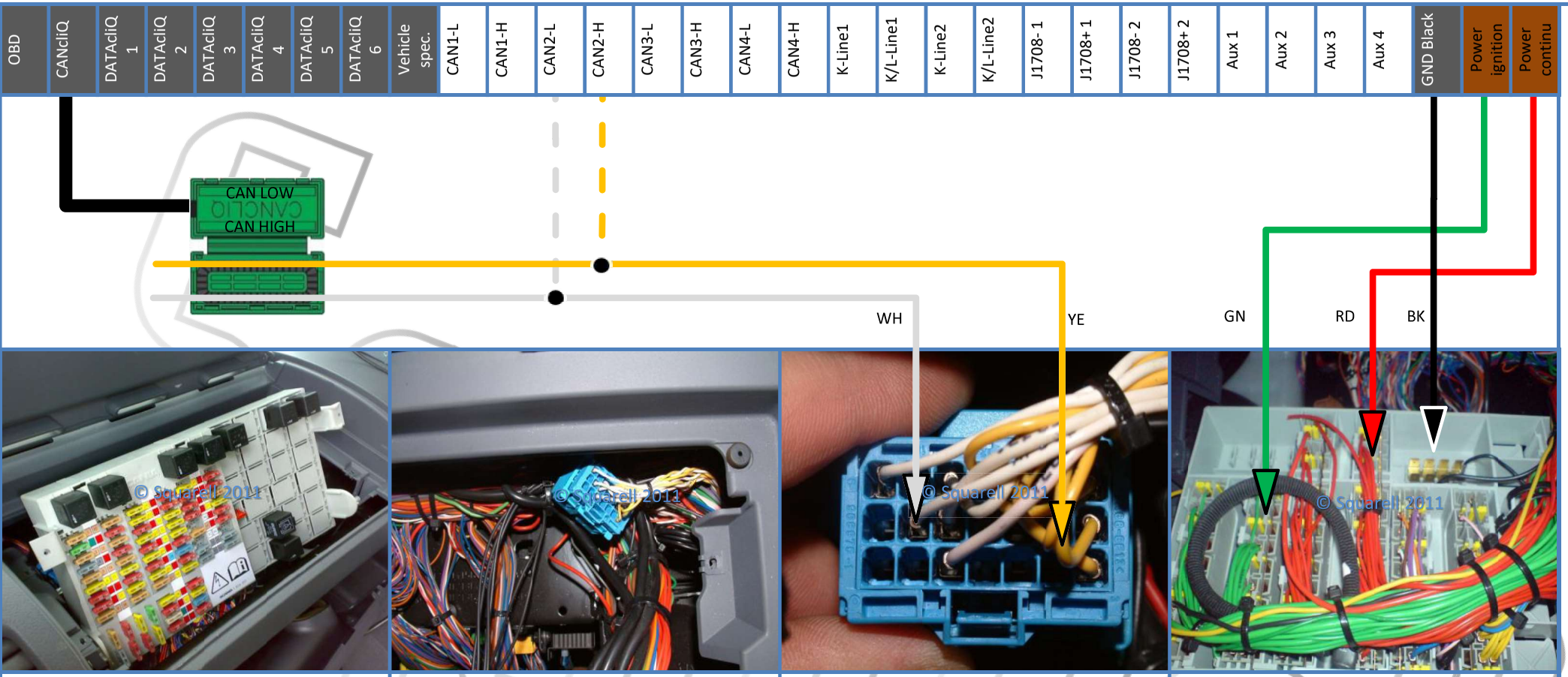

Location

At passenger side
Open fusebox
Remove 2 screws
Turn open Fusebox

Blue connector at door side with twisted Yellow and White wires. Connector can be hidden inside wiring loom.

CANbus

Untwist White and Yellow wires,
Place Scania Yellow wire in CAN High slot
Place Scania White wire in CAN Low slot
Close CANcliQ.

For Direct Connections:
Unlock connector slide by a screwdriver at orange arrow and place the wires to the free terminal on
Column 1 to 3 CAN Low (white)
Column 5 to 7 CAN High (yellow)

Power + Ground

Connections at backside of fuse box.

Ground (KL31) :
Free terminals. (black arrow)

Continuous Power (KL30) :
Free terminals with Red wires (Red arrow).

Power on Ignition (KL15) :
Free terminals with Green wires (Green arrow).

Warning! CANcliQ or DatacliQ closes only once. Please repower the Squarell Device after the installation is completed. Please connect Squarell devices to a 10V to 48V power supply. Please use certified crimping tools to connect the wires.

Scania R-Series (1st gen) 2005-2011

A B C D E F G H I J K L M N O P Q R S T U V W X Y Z

Copyright © Squarell 2012

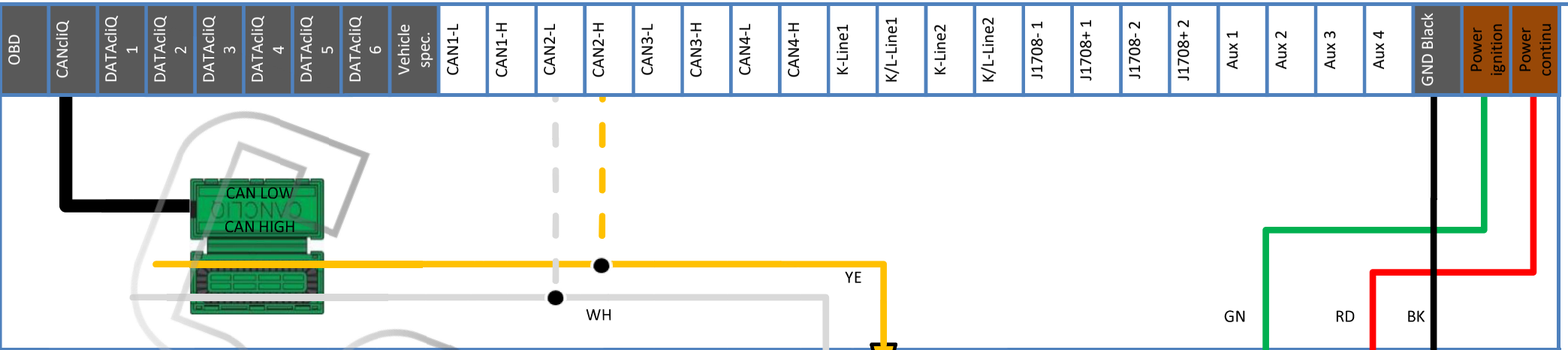

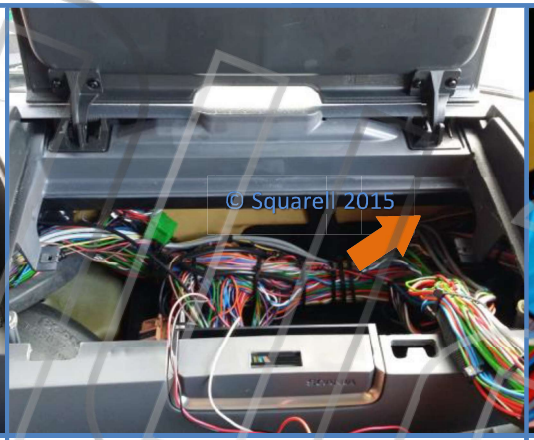

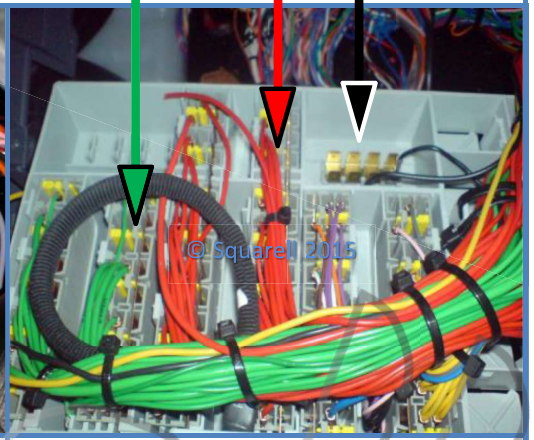

Location

At passenger side open up the dashboard and remove the two screws of the fuse panel. Cut the required tie wraps so you are able to lift out the fuse panel.

After the installation replace the removed tie wraps.

(Deep) in the right corner you will find the Blue CAN distribution block with the Yellow and white wires and a blue CAN distribution with White and Green twisted wires.

CANbus

Untwist Yellow and White wires,
Place Scania Yellow wire in CAN High slot
Place Scania White wire in CAN Low slot
Close CANcliQ.

Power + Ground

Connections at backside of fuse box.

Ground (KL31) :
Free terminals. (black arrow)

Continuous Power (KL30) :
Free terminals with Red wires (Red arrow).

Power on Ignition (KL15) :
Free terminals with Green wires (Green arrow).

Warning! CANcliQ or DatacliQ closes only once. Please repower the Squarell Device after the installation is completed. Please connect Squarell devices to a 10V to 30V power supply. Please use certified crimping tools to connect the wires.

Scania R-Series (1st gen Facelift) 2012-2016

A B C D E F G H I J K L M N O P Q R S T U V W X Y Z

Copyright © Squarell 2015

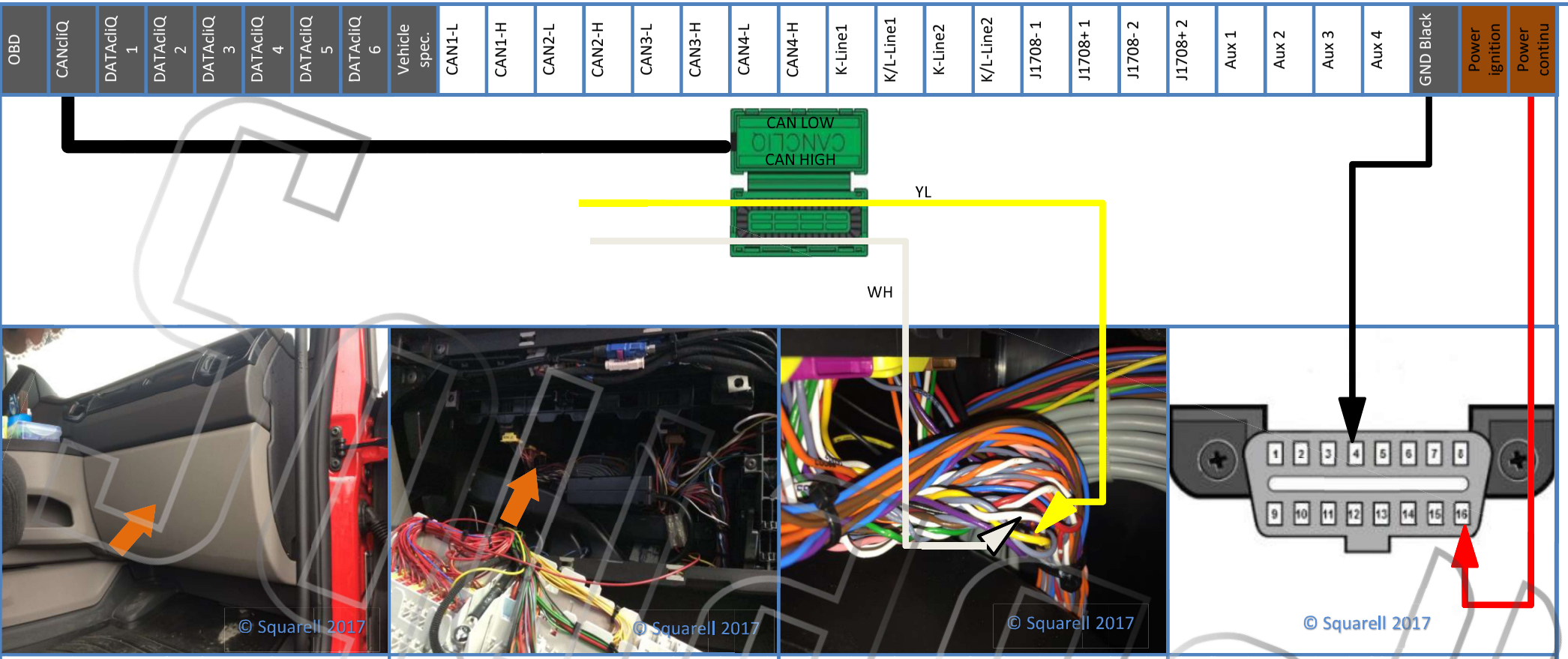

Location

Find the CAN-bus wires at the passenger side. Located behind the fuse box. Which is behind the dashboard cover.

Remove the dashboard cover and fuse box to find the wiring loom at the left side, that contains a yellow and white twisted pair of wires, with a grey ground wire.

CANbus

Untwist the Yellow and White wires.

Place the Yellow wire in the CAN High Slot.
Place the White wire in the CAN Low slot.
Close CANcliQ.

Power + Ground
Connections in OBD connector

Ground (KL31) :
OBD connector pin 4 and pin 5

Continuous Power (KL30) :
Pin 16 OBD connector

Warning! CANcliQ or DatacliQ closes only once. Please repower the Squarell Device after the installation is completed. Please connect Squarell devices to a 10V to 30V power supply. Please use certified crimping tools to connect the wires.

Scania R-series (2nd gen) 2016+

Copyright © Squarell 2016

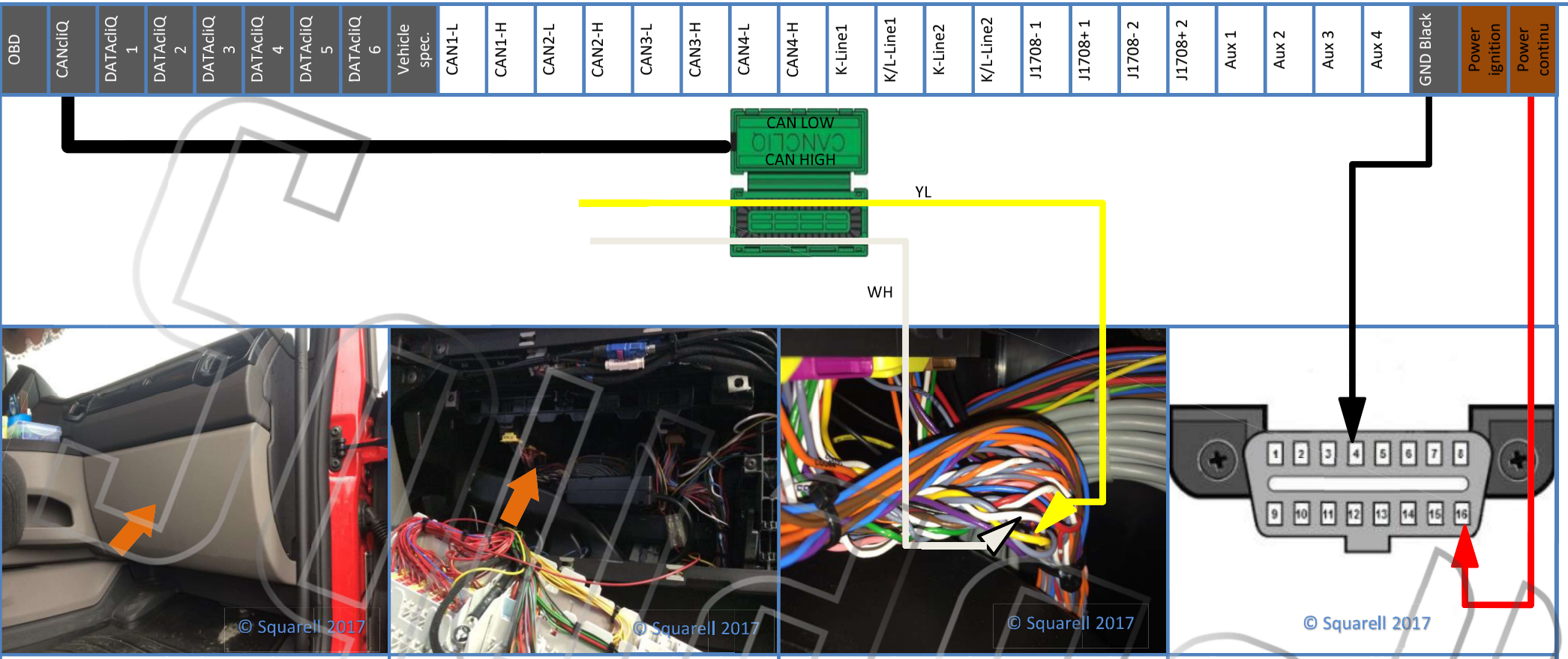

Location

Find the CAN-bus wires at the passenger side. Located behind the fusebox. Which is behind the dashboard cover.

Remove the dashboard cover and fusebox to find the wiring loom at the left side, that contains a yellow and white twisted pair of wires, with a grey ground wire.

CANbus

Untwist the Yellow and White wires.

Place the Yellow wire in the CAN High Slot.
Place the White wire in the CAN Low slot.
Close CANcliQ.

Power + Ground
Connections in OBD connector

Ground (KL31) :
OBD connector pin 4 and pin 5

Continuous Power (KL30) :
Pin 16 OBD connector

Warning! CANcliQ or DatacliQ closes only once. Please repower the Squarell Device after the installation is completed. Please connect Squarell devices to a 10V to 30V power supply. Please use certified crimping tools to connect the wires.

Scania S-series (1st gen) 2016+

Copyright © Squarell 2016

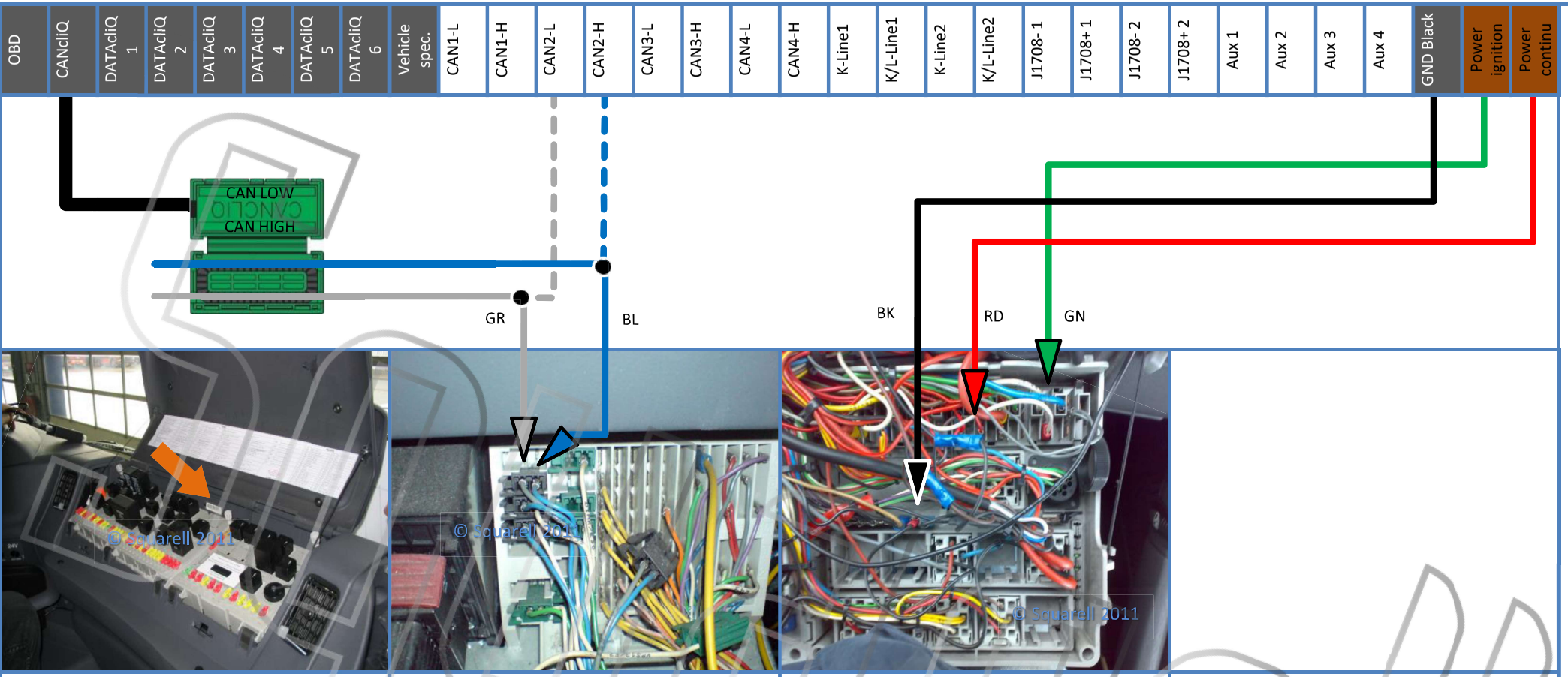

Location

At passenger side
Open fusebox
Remove 2 screws
Turn open Fusebox

CANbus

Find in the middle of the area under need the fuse box the Black connector with twisted Grey and Blue wires.

Untwist Grey and Blue wires.
place Scania Blue wire in CAN High
place Scania Grey wire in CAN Low
Close CANcliQ.

Power + Ground

Connections at backside of fuse box.

Ground (KL31) :
Free terminals. (black arrow)

Continuous Power (KL30) :
Fuse location number 40/41 (Red arrow).

Power on Ignition (KL15) :
Fuse location number 44/45 (Green arrow).

Warning! CANcliQ or DatacliQ closes only once. Please repower the Squarell Device after the installation is completed. Please connect Squarell devices to a 10V to 48V power supply. Please use certified crimping tools to connect the wires.
This vehicle type is not supporting the Vehicle Distance (Odometer), Total Fuel Used and the Fuel Level on the Direct CANbus. Squarell unit will start counting the Vehicle Distance (Odometer) and the Total Fuel Used since the installation.

Scania T-Series with EDC 1998-2000

A B C D E F G H I J K L M N O P Q R S T U V W X Y Z

Copyright © Squarell 2011

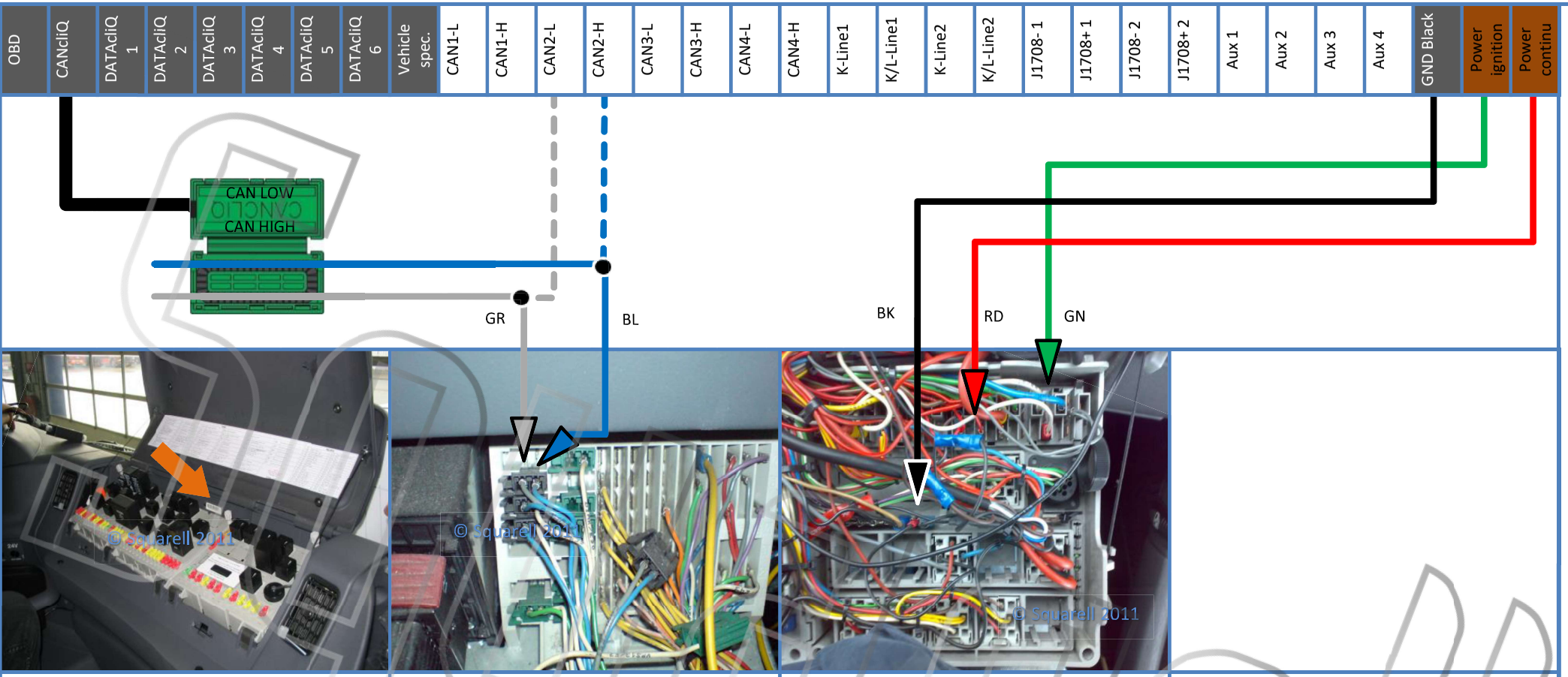

Location

At passenger side
Open fusebox
Remove 2 screws
Turn open Fusebox

CANbus

Find in the middle of the area under need the fuse box the Black connector with twisted Grey and Blue wires.

Untwist Grey and Blue wires.
place Scania Blue wire in CAN High
place Scania Grey wire in CAN Low
Close CANcliQ.

Power + Ground

Connections at backside of fuse box.

Ground (KL31) :
Free terminals. (black arrow)

Continuous Power (KL30) :
Fuse location number 40/41 (Red arrow).

Power on Ignition (KL15) :
Fuse location number 44/45 (Green arrow).

Warning! CANcliQ or DatacliQ closes only once. Please repower the Squarell Device after the installation is completed. Please connect Squarell devices to a 10V to 48V power supply. Please use certified crimping tools to connect the wires.
This vehicle type is not supporting the Vehicle Distance (Odometer), Total Fuel Used and the Fuel Level on the Direct CANbus. Squarell unit will start counting the Vehicle Distance (Odometer) and the Total Fuel Used since the installation.

Scania T-Series 2000-2004

A B C D E F G H I J K L M N O P Q R S T U V W X Y Z

Copyright © Squarell 2011