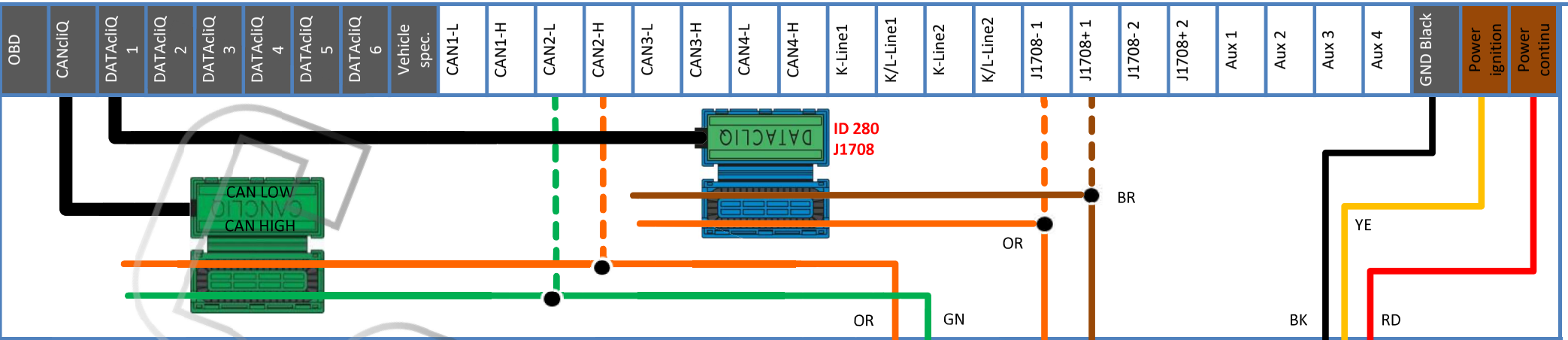

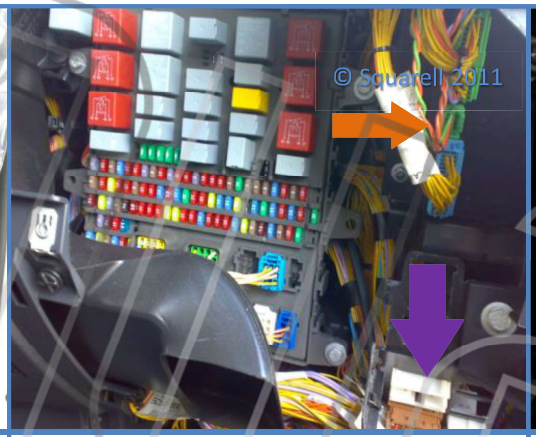

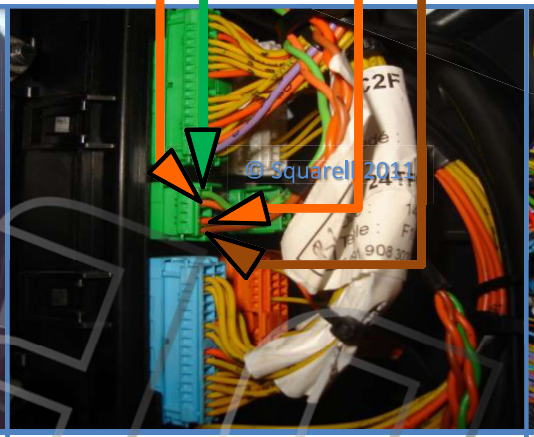

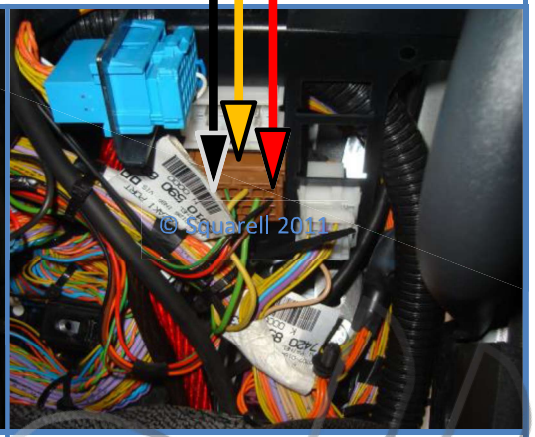

Location

At passenger side
Open 2 locks, remove dashboard cap
Remove lower dashboard panel

Find the VECU on right side of fuse box.
(orange arrow)

CANbus

Untwist Green and Orange wires,
Place Orange wire in CAN High slot
Place Green wire in CAN Low slot
Close CANcliQ.

J1708 bus
Untwist Brown and Orange wires,
Place Brown wire in High slot
Place Orange wire in Low slot
Close DatacliQ.

Power + Ground

Connections on the Brown Body Builder PB1 connector (Purple arrow)

Ground (KL31):
Pin 1, or Pin 21 (black arrow)

Continuous Power (KL30):
Pin 30 (Red arrow)

Power on Ignition (KL15):
Pin 2 (Yellow arrow)

Warning! CANcliQ or DatacliQ closes only once. Please repower the Squarell Device after the installation is completed. Please connect Squarell devices to a 10V to 48V power supply. Please use certified crimping tools to connect the wires.
This vehicle type is not supporting the Total Fuel Used, Engine Coolant Temperature and the Fuel Level on the Direct CANbus. Squarell unit will start counting the Total Fuel Used since the installation. The Engine Coolant Temperature and the Fuel Level can only be supported with a 6628-31 J1708 Diode or FLX12 Flex .

Volvo FE (1st gen) 2006-2012

Copyright © Squarell 2013

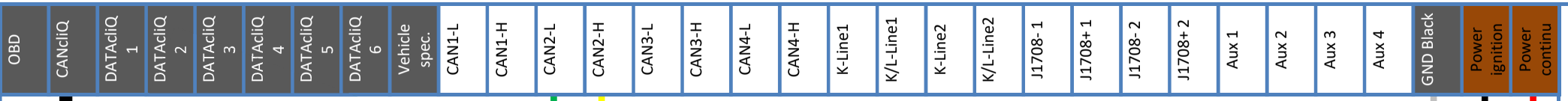

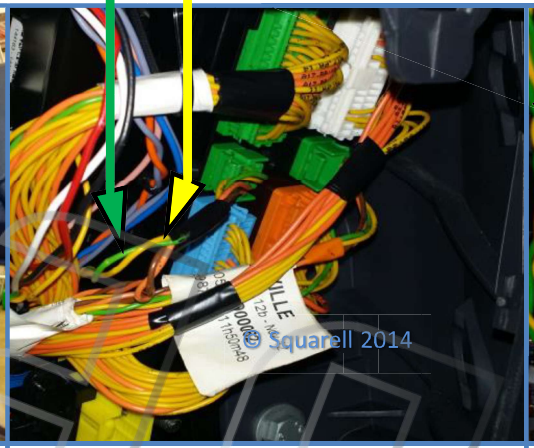

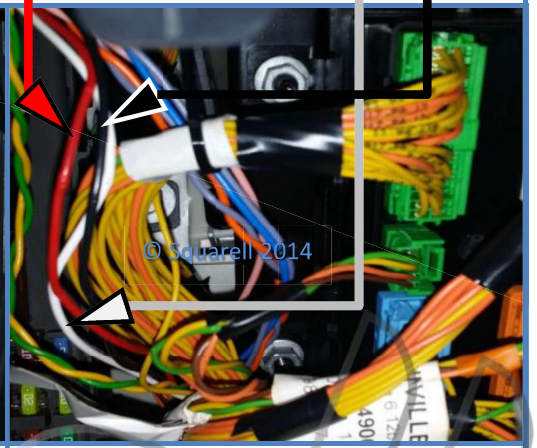

Location

At the passenger side open up the cover with 2 plastic clips.

In the fuse box at the right side, you will find the Volvo CAN controller.

CANbus

Untwist the Yellow and Green wire from the 4 pin connector between the green and blue connector.

Place the Yellow wire in the CAN High slot.
Place the Green wire in the CAN low slot.
Close the CANcliQ properly.

Power + Ground

Ground (KL31) :
White wire (White arrow).

Continuous Power (KL30) :
Red wire(Red arrow).

Power on Ignition (KL15) :
Black wire (Black arrow).

Warning! CANcliQ or DatacliQ closes only once. Please repower the Squarell Device after the installation is completed. Please connect Squarell devices to a 10V to 30V power supply. Please use certified crimping tools to connect the wires.

Volvo FE (1st gen Facelift) Euro 6 2013-2021

Copyright © Squarell 2014

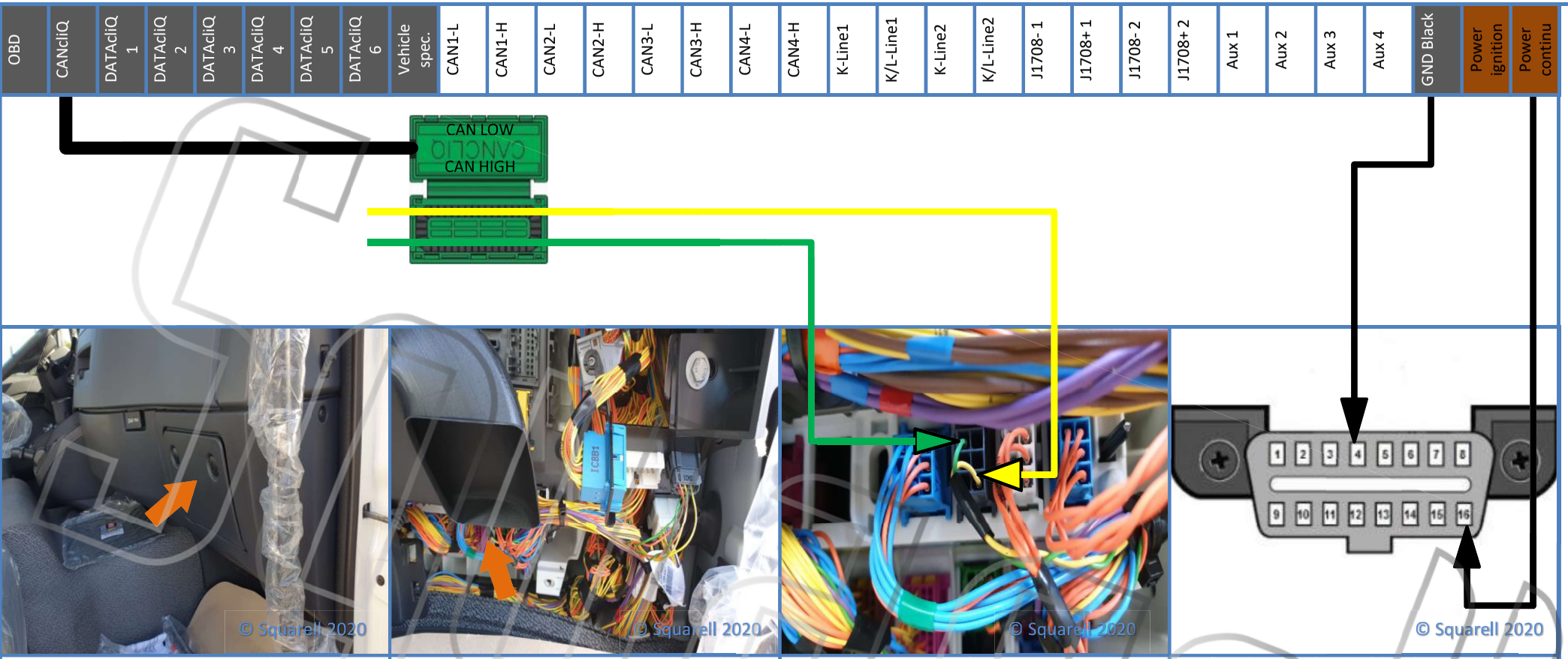

Location

Remove the panel + cover at the passenger side to gain access to the connection.

Behind the air vent a yellow/green twisted wire can be found.

CANbus

Untwist the Yellow/Green in the grey connector labeled YFB1.

Place the Yellow wire in the CAN High Slot.
Place the Green wire in the CAN Low slot.

Close CANcliQ.

Power + Ground

Find a suitable location yourself or use the OBD.

Connections in OBD connector

Ground (KL31) :
OBD connector pin 4 wire and pin 5

Continuous Power (KL30) :
Pin 16 wire OBD connector

Warning! CANcliQ or DatacliQ closes only once. Please repower the Squarell Device after the installation is completed. Please connect Squarell devices to a 10V to 30V power supply. Please use certified crimping tools to connect the wires.

Volvo FE (2nd gen) Euro 6 2021+

Copyright © Squarell 2020

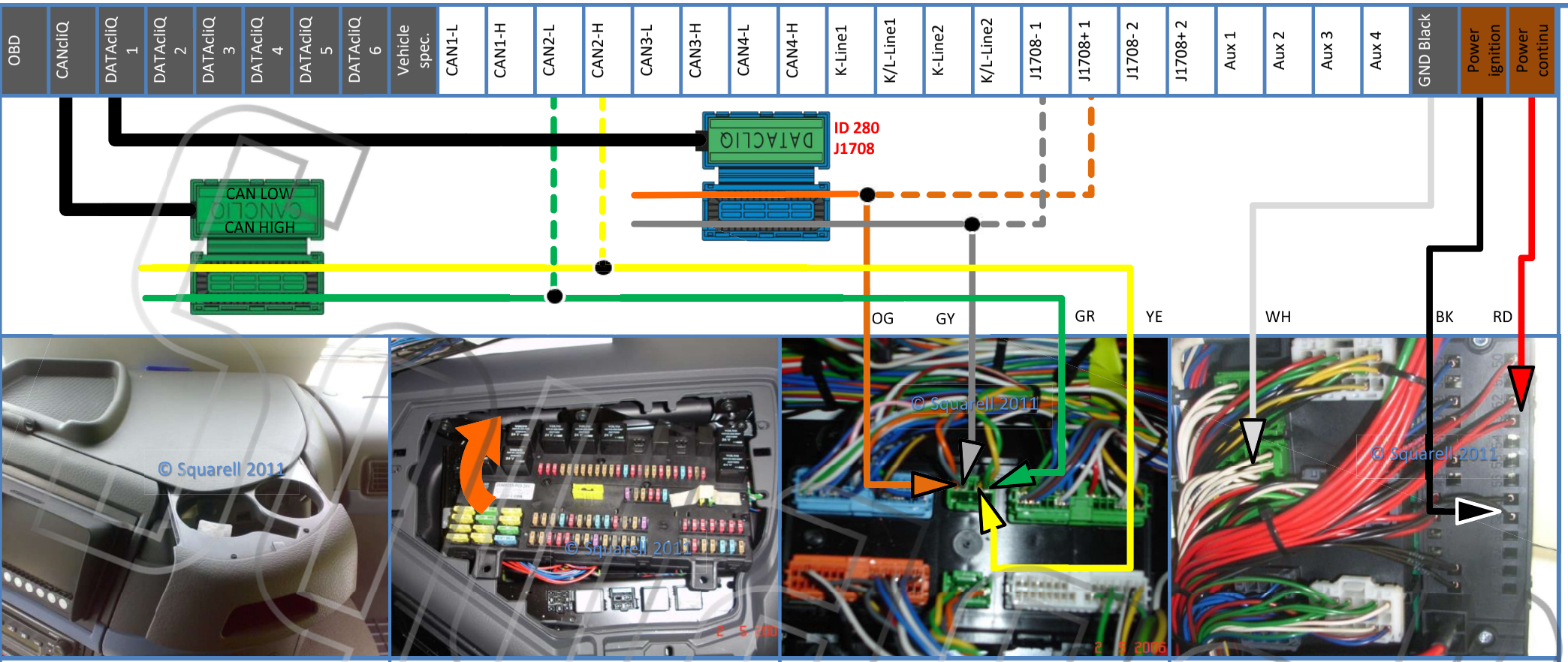

Location

Remove screws at extractable cup holder
Open triangular shaped upper dashboard panel

Remove 4 screws of fuse box
Open fuse box compartment
Find the VECU under the fuse box

CANbus

Untwist Green and Yellow wires,
Place Yellow wire in CAN High slot
Place Green wire in CAN Low slot
Close CANcliQ.

J1708 bus (DatacliQ)
Untwist Grey and Orange wires,
Place Orange wire in High slot
Place Grey wire in low slot
Close DatacliQ.

Power + Ground

Connections at backside of fuse box.

Ground (KL31)
Green connector with white wires (White arrow)

Continuous Power (KL30)
Free terminals "from 50 to 54" (Red arrow).

Power on Ignition (KL15)
Free terminals "from 55 to 62" (Black arrow).

Warning! CANcliQ or DatacliQ closes only once. Please repower the Squarell Device after the installation is completed. Please connect Squarell devices to a 10V to 30V power supply. Please use certified crimping tools to connect the wires.
This vehicle type is not supporting the Total Fuel Used, Engine Coolant Temperature and the Fuel Level on the Direct CANbus. Squarell unit will start counting the Total Fuel Used since the installation. The Engine Coolant Temperature and the Fuel Level can only be supported with a 6628-31 J1708 Diode or FLX12 Flex .

Volvo FH (Version 98) 1998-2002

Copyright © Squarell 2013

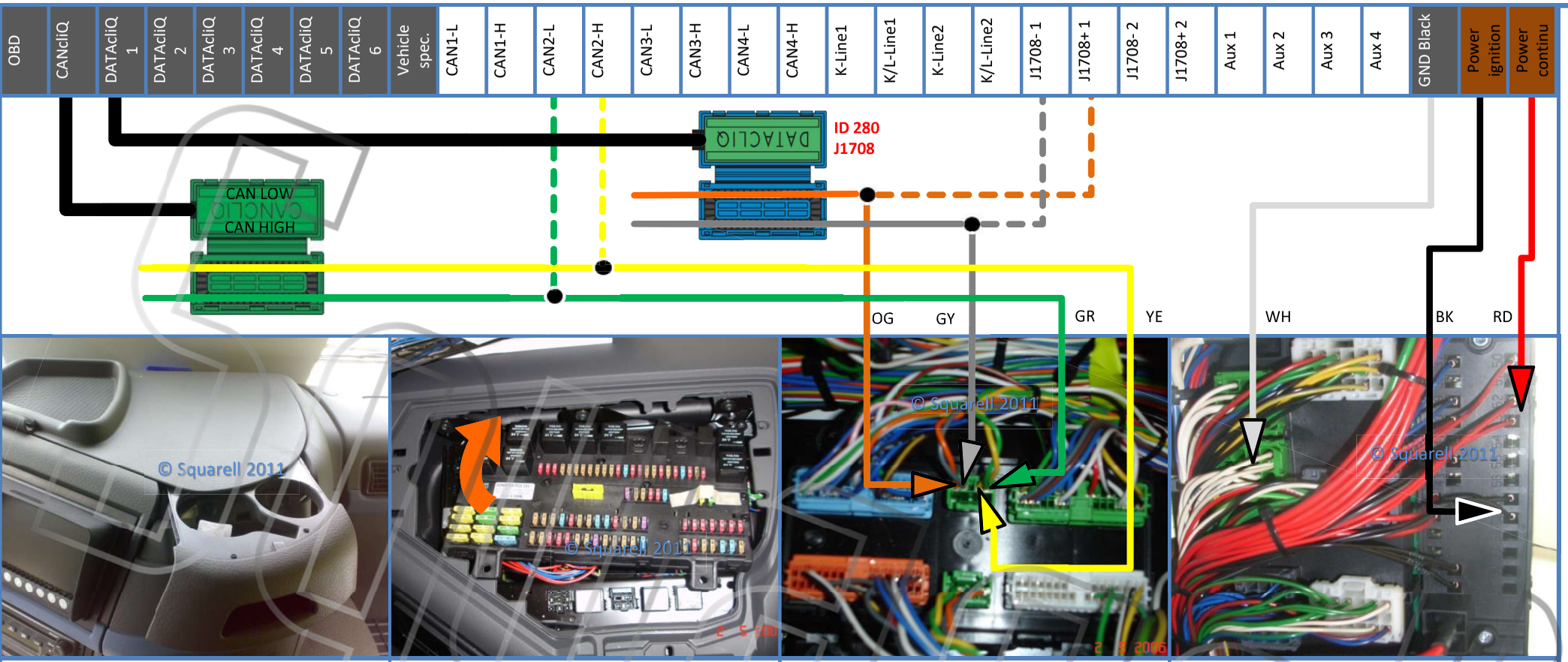

Location

Remove screws at extractable cup holder
Open triangular shaped upper dashboard panel

Remove 4 screws of fuse box
Open fuse box compartment
Find the VECU under the fuse box

CANbus

Untwist Green and Yellow wires,
Place Yellow wire in CAN High slot
Place Green wire in CAN Low slot
Close CANcliQ.

J1708 bus (DatacliQ)
Untwist Grey and Orange wires,
Place Orange wire in High slot
Place Grey wire in low slot
Close DatacliQ.

Power + Ground

Connections at backside of fuse box.

Ground (KL31)
Green connector with white wires (White arrow)

Continuous Power (KL30)
Free terminals "from 50 to 54" (Red arrow).

Power on Ignition (KL15)
Free terminals "from 55 to 62" (Black arrow).

Warning! CANcliQ or DatacliQ closes only once. Please repower the Squarell Device after the installation is completed. Please connect Squarell devices to a 10V to 30V power supply. Please use certified crimping tools to connect the wires.
This vehicle type is not supporting the Total Fuel Used, Engine Coolant Temperature and the Fuel Level on the Direct CANbus. Squarell unit will start counting the Total Fuel Used since the installation. The Engine Coolant Temperature and the Fuel Level can only be supported with a 6628-31 J1708 Diode or FLX12 Flex .

Volvo FH (Version 2) 2002-2012

Copyright © Squarell 2013

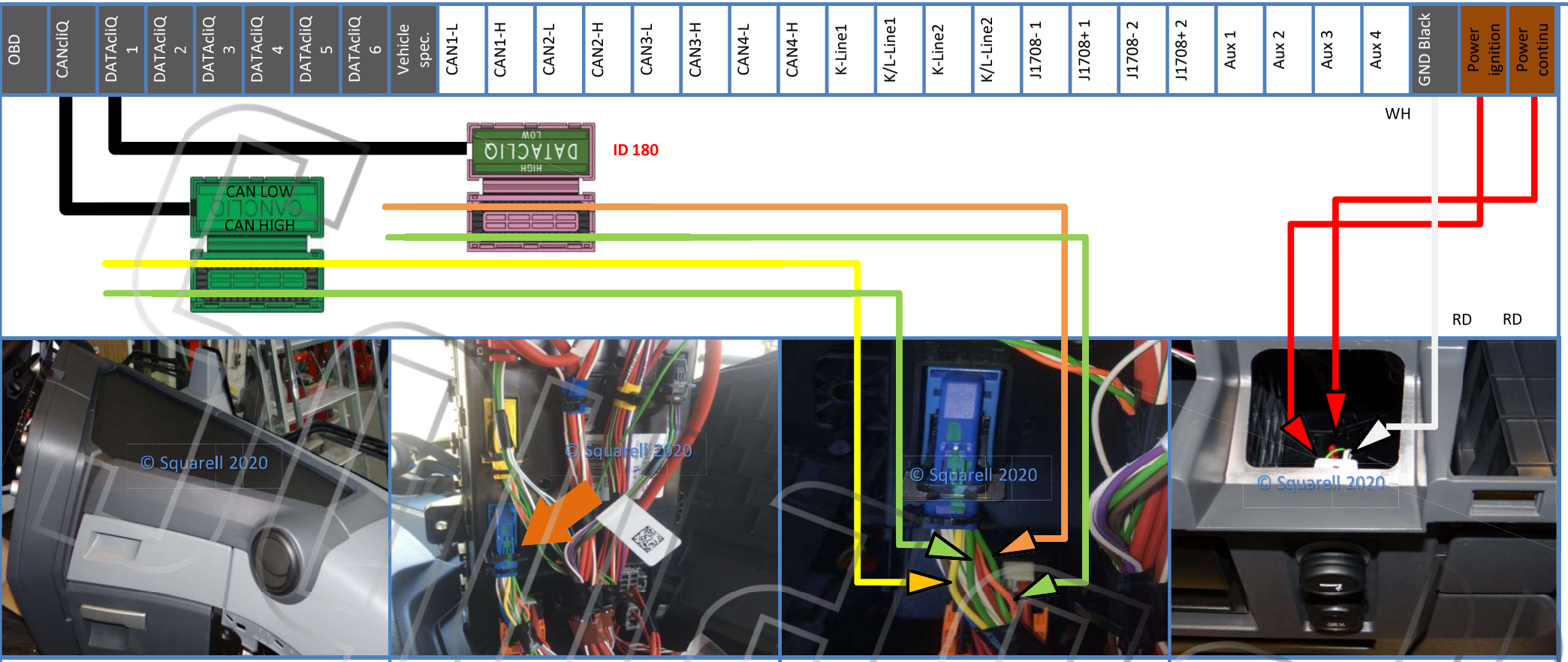

Location

Middle Console under the rubber cover, you will find the fuse box. Open the Fuse box cover with the 2 clips. Unscrew the Fuse box and turn it on its side. There you should see several colored connectors (CN1, CN2, CN3).

Location

Find the Blue Connector (CN3) on the underside of the fuse box.

CANbus

Untwist the Yellow (pin 7, wire number 7004) and Green (pin 8, wire number 7005) wires .
Place the Green wire in CAN Low slot
Place Yellow wire in CAN High slot
Close CANcliQ.

Second CANbus

Untwist the Orange (pin 4, wire number 7006) and Green (pin 5, wire number 7007 wires .
Place the Orange wire in CAN High slot
Place Yellow wire in CAN Low slot
Close DatacliQ.

Power + Ground

Several options

Ground (KL31) :
Terminal as in picture (White arrow)

Continuous Power (KL30) :
Terminal as in picture (Red arrow)
Power supply

Power on Ignition (KL15) :
Terminal as in picture (Red arrow)
Cigarette lighter

Warning! CANcliQ or DatacliQ closes only once. Please repower the Squarell Device after the installation is completed. Please connect Squarell devices to a 10V to 48V power supply. Please use certified crimping tools to connect the wires.

Volvo FH (4) Euro 6 2012+

Copyright © Squarell 2020

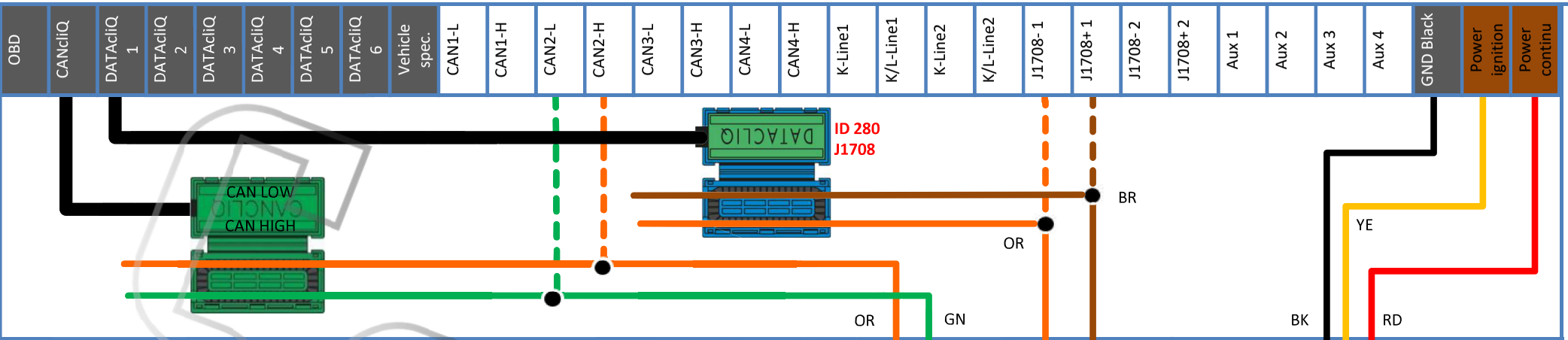

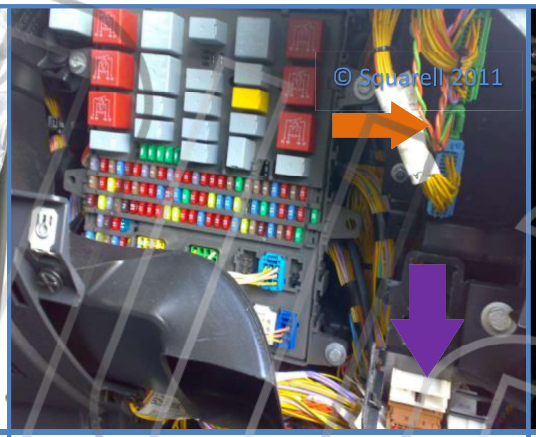

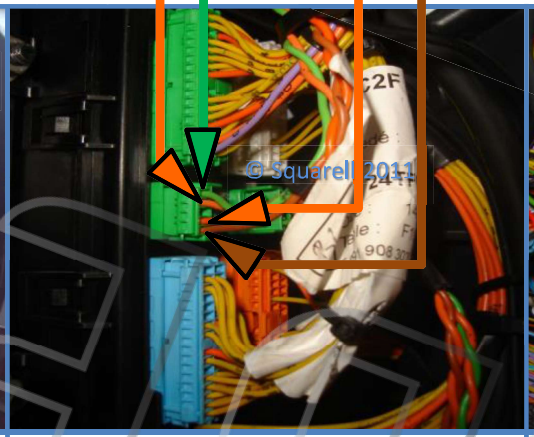

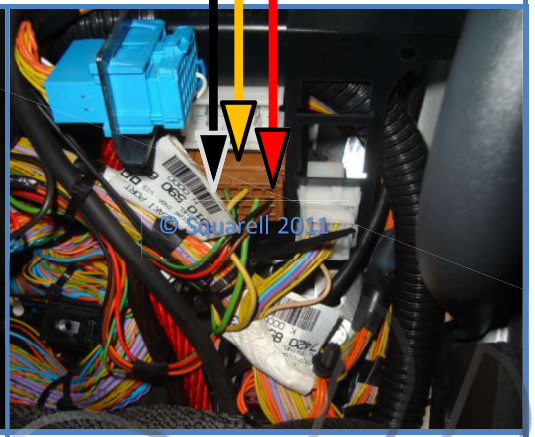

Location

At passenger side
Open 2 locks, remove dashboard cap
Remove lower dashboard panel

Find the VECU on right side of fuse box.
(orange arrow)

CANbus

Untwist Green and Orange wires,
Place Orange wire in CAN High slot
Place Green wire in CAN Low slot
Close CANcliQ.

J1708 bus
Untwist Brown and Orange wires,
Place Brown wire in High slot
Place Orange wire in Low slot
Close DatacliQ.

Power + Ground

Connections on the Brown Body Builder PB1 connector (Purple arrow)

Ground (KL31):
Pin 1, or Pin 21 (black arrow)

Continuous Power (KL30):
Pin 30 (Red arrow)

Power on Ignition (KL15):
Pin 2 (Yellow arrow)

Warning! CANcliQ or DatacliQ closes only once. Please repower the Squarell Device after the installation is completed. Please connect Squarell devices to a 10V to 48V power supply. Please use certified crimping tools to connect the wires.
This vehicle type is not supporting the Total Fuel Used, Engine Coolant Temperature and the Fuel Level on the Direct CANbus. Squarell unit will start counting the Total Fuel Used since the installation. The Engine Coolant Temperature and the Fuel Level can only be supported with a 6628-31 J1708 Diode or FLX12 Flex .

Volvo FL (1st gen Facelift) 2000-2005

Copyright © Squarell 2013

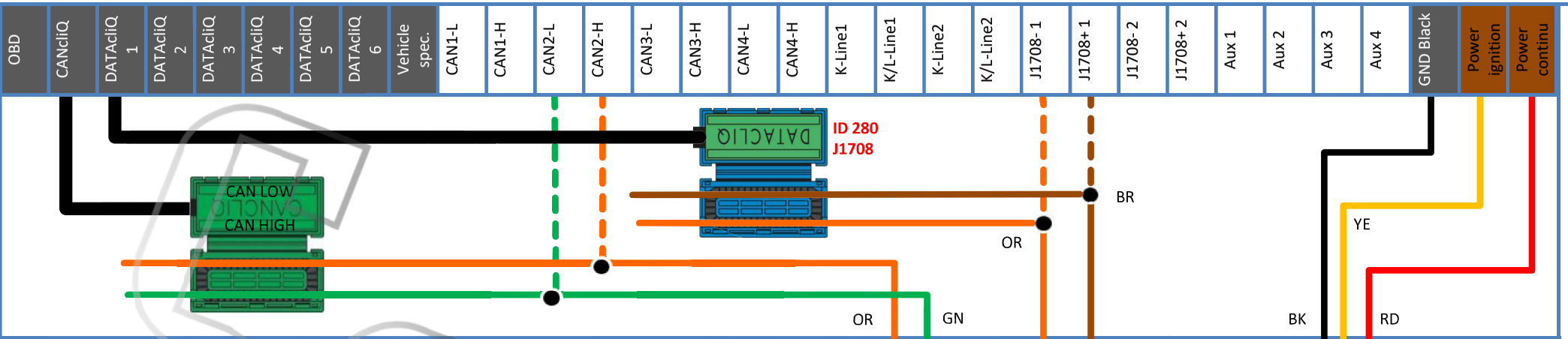

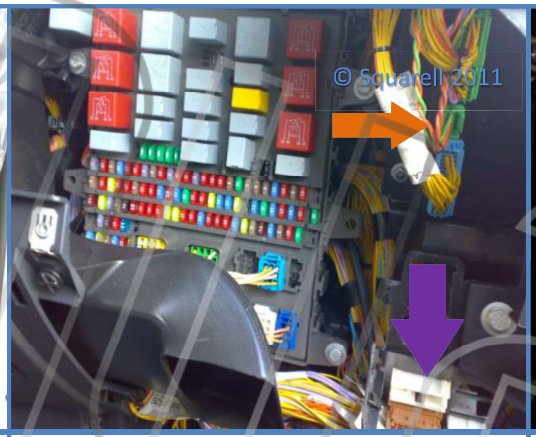

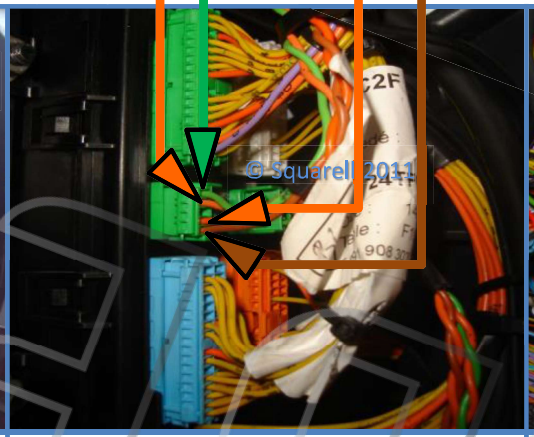

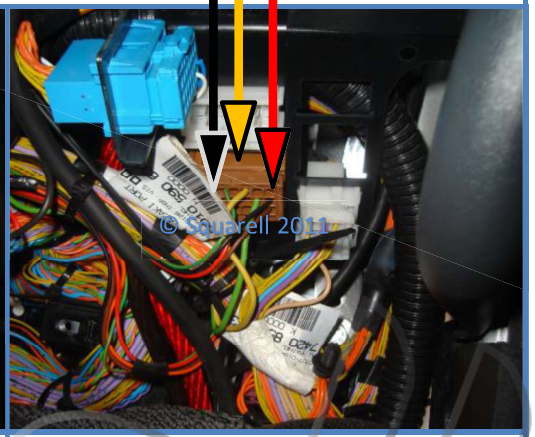

Location

At passenger side
Open 2 locks, remove dashboard cap
Remove lower dashboard panel

Find the VECU on right side of fuse box.
(orange arrow)

CANbus

Untwist Green and Orange wires,
Place Orange wire in CAN High slot
Place Green wire in CAN Low slot
Close CANcliQ.

J1708 bus
Untwist Brown and Orange wires,
Place Brown wire in High slot
Place Orange wire in Low slot
Close DatacliQ.

Power + Ground

Connections on the Brown Body Builder PB1 connector (Purple arrow)

Ground (KL31):
Pin 1, or Pin 21 (black arrow)

Continuous Power (KL30):
Pin 30 (Red arrow)

Power on Ignition (KL15):
Pin 2 (Yellow arrow)

Warning! CANcliQ or DatacliQ closes only once. Please repower the Squarell Device after the installation is completed. Please connect Squarell devices to a 10V to 48V power supply. Please use certified crimping tools to connect the wires.
This vehicle type is not supporting the Total Fuel Used, Engine Coolant Temperature and the Fuel Level on the Direct CANbus. Squarell unit will start counting the Total Fuel Used since the installation. The Engine Coolant Temperature and the Fuel Level can only be supported with a 6628-31 J1708 Diode or FLX12 Flex .

Volvo FL (2nd gen) 2006-2012

Copyright © Squarell 2013

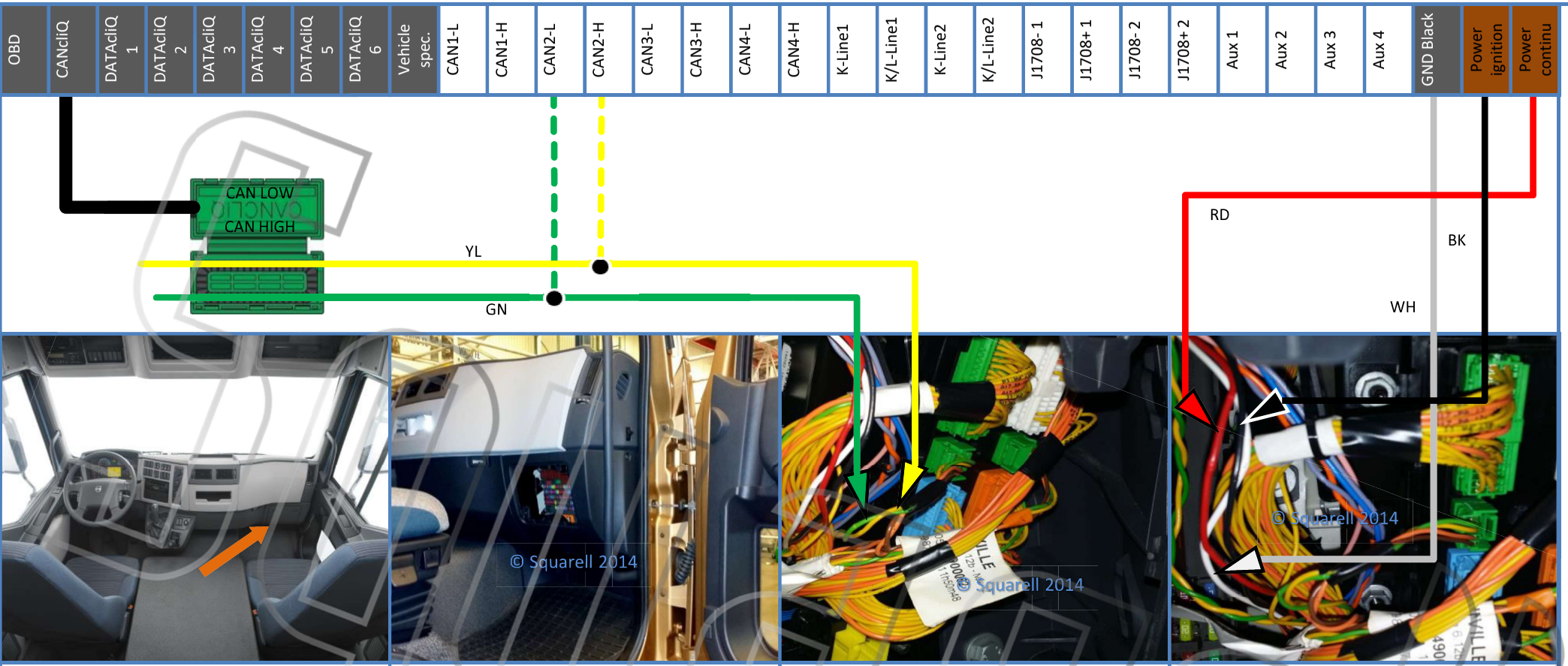

Location

At the passenger side open up the cover with 2 plastic clips.

In the fuse box at the right side, you will find the Volvo CAN controller.

CANbus

Untwist the Yellow and Green wire from the 4 pin connector between the green and blue connector.

Place the Yellow wire in the CAN High slot.
Place the Green wire in the CAN low slot.
Close the CANcliQ properly.

Power + Ground

Ground (KL31) :
White wire (White arrow).

Continuous Power (KL30) :
Red wire(Red arrow).

Power on Ignition (KL15) :
Black wire (Black arrow).

Warning! CANcliQ or DatacliQ closes only once. Please repower the Squarell Device after the installation is completed. Please connect Squarell devices to a 10V to 30V power supply. Please use certified crimping tools to connect the wires.

Volvo FL (2nd gen Facelift) Euro 6 2013-2021

A B C D E F G H I J K L M N O P Q R S T U V W X Y Z

Copyright © Squarell 2014

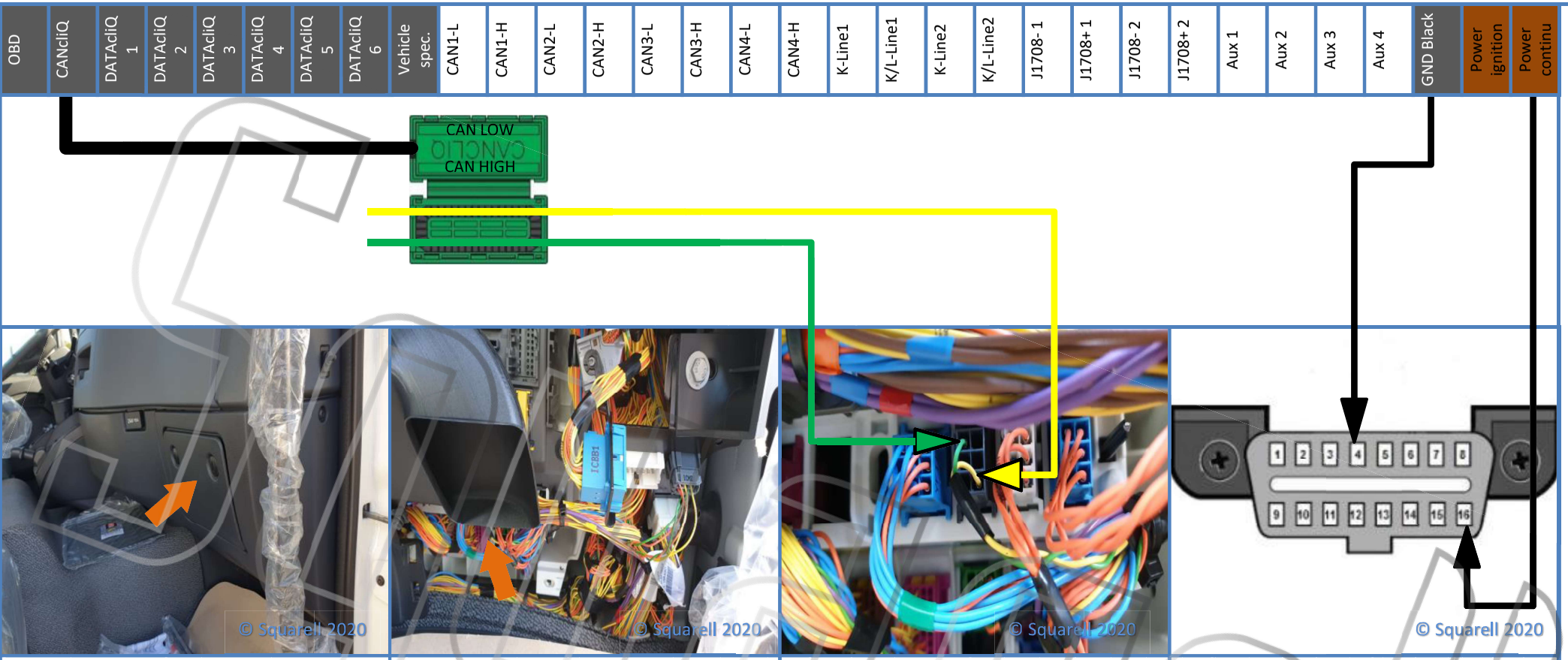

Location

Remove the panel + cover at the passenger side to gain access to the connection.

Behind the air vent a yellow/green twisted wire can be found.

CANbus

Untwist the Yellow/Green in the grey connector labeled YFB1.

Place the Yellow wire in the CAN High Slot.
Place the Green wire in the CAN Low slot.

Close CANcliQ.

Power + Ground

Find a suitable location yourself or use the OBD.

Connections in OBD connector

Ground (KL31) :
OBD connector pin 4 wire and pin 5

Continuous Power (KL30) :
Pin 16 wire OBD connector

Warning! CANcliQ or DatacliQ closes only once. Please repower the Squarell Device after the installation is completed. Please connect Squarell devices to a 10V to 30V power supply. Please use certified crimping tools to connect the wires.

Volvo FL (3rd gen) Euro 6 2021+

Copyright © Squarell 2020

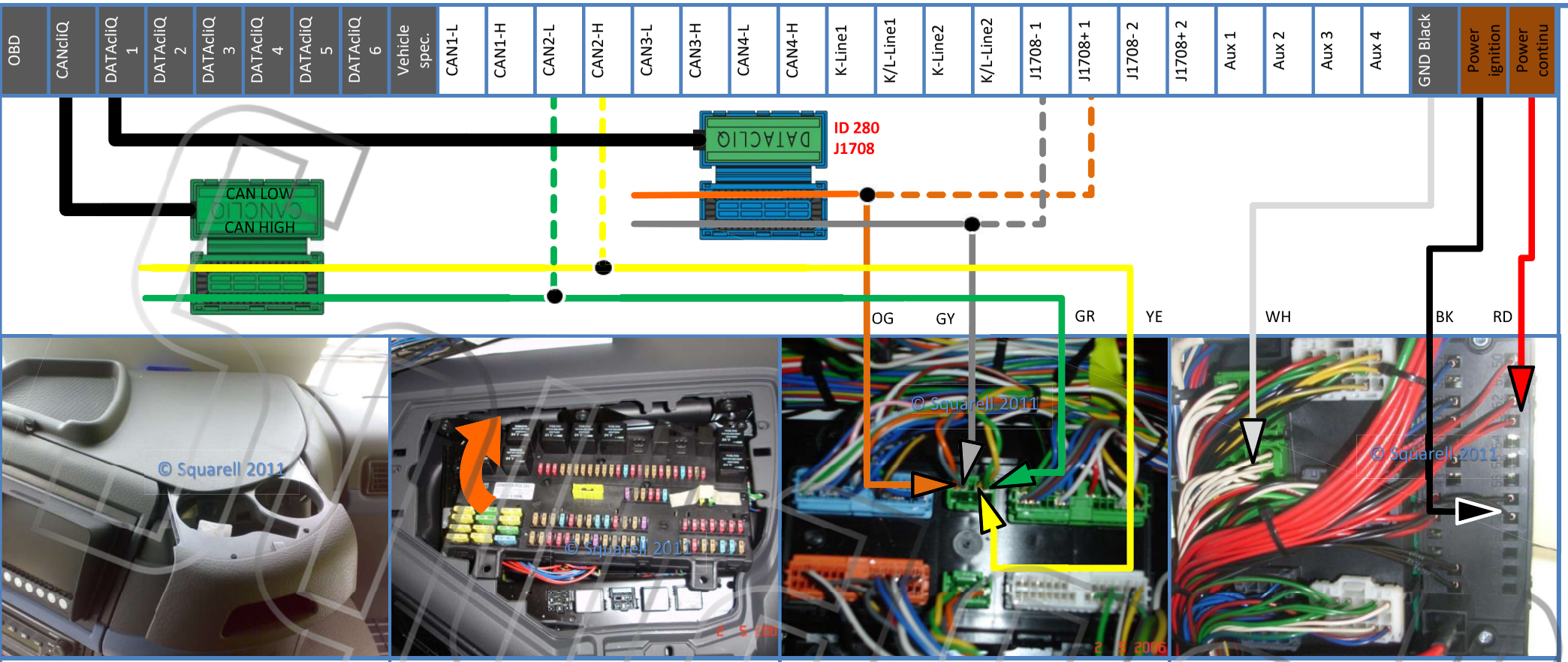

Location

Remove screws at extractable cup holder
Open triangular shaped upper dashboard panel

Remove 4 screws of fuse box
Open fuse box compartment
Find the VECU under the fuse box

CANbus

Untwist Green and Yellow wires,
Place Yellow wire in CAN High slot
Place Green wire in CAN Low slot
Close CANcliQ.

J1708 bus (DatacliQ)
Untwist Grey and Orange wires,
Place Orange wire in High slot
Place Grey wire in low slot
Close DatacliQ.

Power + Ground

Connections at backside of fuse box.

Ground (KL31)
Green connector with white wires (White arrow)

Continuous Power (KL30)
Free terminals "from 50 to 54" (Red arrow).

Power on Ignition (KL15)
Free terminals "from 55 to 62" (Black arrow).

Warning! CANcliQ or DatacliQ closes only once. Please repower the Squarell Device after the installation is completed. Please connect Squarell devices to a 10V to 30V power supply. Please use certified crimping tools to connect the wires.
This vehicle type is not supporting the Total Fuel Used, Engine Coolant Temperature and the Fuel Level on the Direct CANbus. Squarell unit will start counting the Total Fuel Used since the installation. The Engine Coolant Temperature and the Fuel Level can only be supported with a 6628-31 J1708 Diode or FLX12 Flex .

Volvo FM (1st gen) 1998-2002

Copyright © Squarell 2013

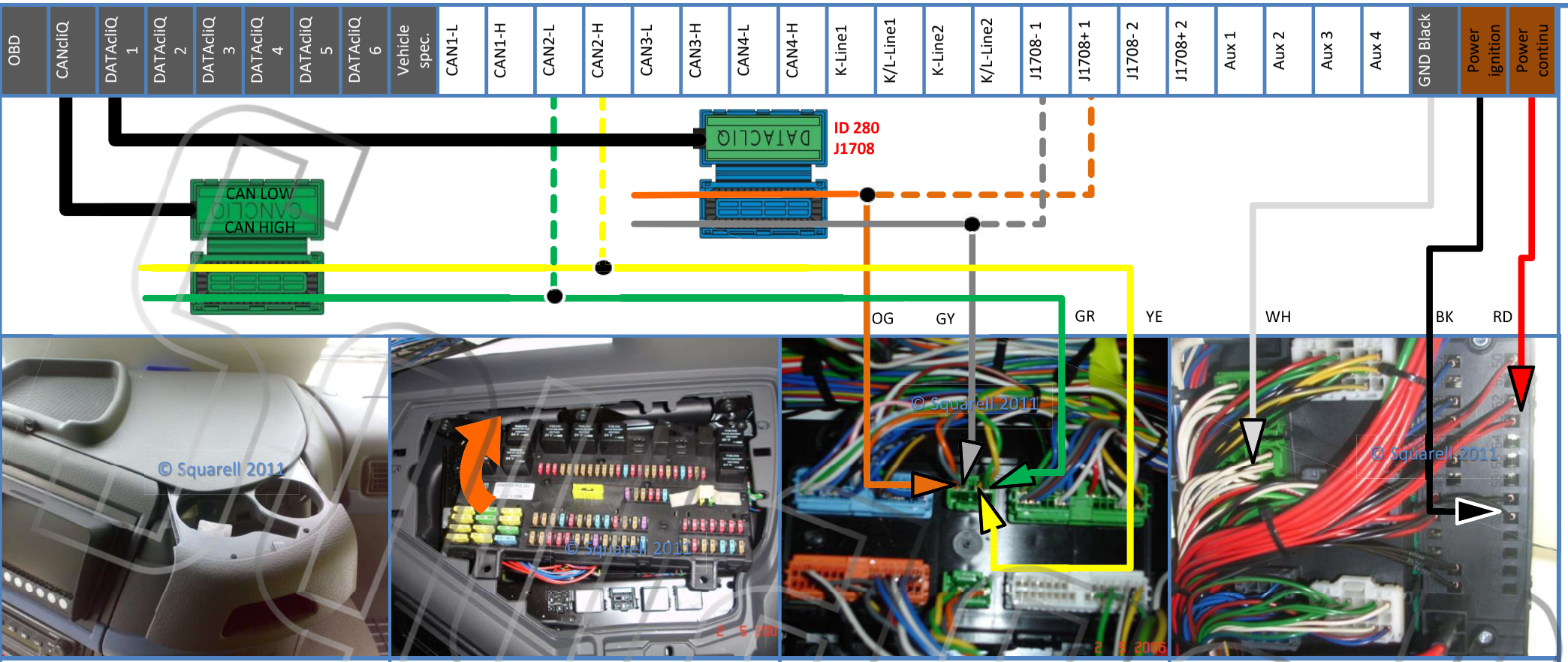

Location

Remove screws at extractable cup holder
Open triangular shaped upper dashboard panel

Remove 4 screws of fuse box
Open fuse box compartment
Find the VECU under the fuse box

CANbus

Untwist Green and Yellow wires,
Place Yellow wire in CAN High slot
Place Green wire in CAN Low slot
Close CANcliQ.

J1708 bus (DatacliQ)
Untwist Grey and Orange wires,
Place Orange wire in High slot
Place Grey wire in low slot
Close DatacliQ.

Power + Ground

Connections at backside of fuse box.

Ground (KL31)
Green connector with white wires (White arrow)

Continuous Power (KL30)
Free terminals "from 50 to 54" (Red arrow).

Power on Ignition (KL15)
Free terminals "from 55 to 62" (Black arrow).

Warning! CANcliQ or DatacliQ closes only once. Please repower the Squarell Device after the installation is completed. Please connect Squarell devices to a 10V to 30V power supply. Please use certified crimping tools to connect the wires.
This vehicle type is not supporting the Total Fuel Used, Engine Coolant Temperature and the Fuel Level on the Direct CANbus. Squarell unit will start counting the Total Fuel Used since the installation. The Engine Coolant Temperature and the Fuel Level can only be supported with a 6628-31 J1708 Diode or FLX12 Flex .

Volvo FM (2nd gen) 2002-2012

Copyright © Squarell 2013

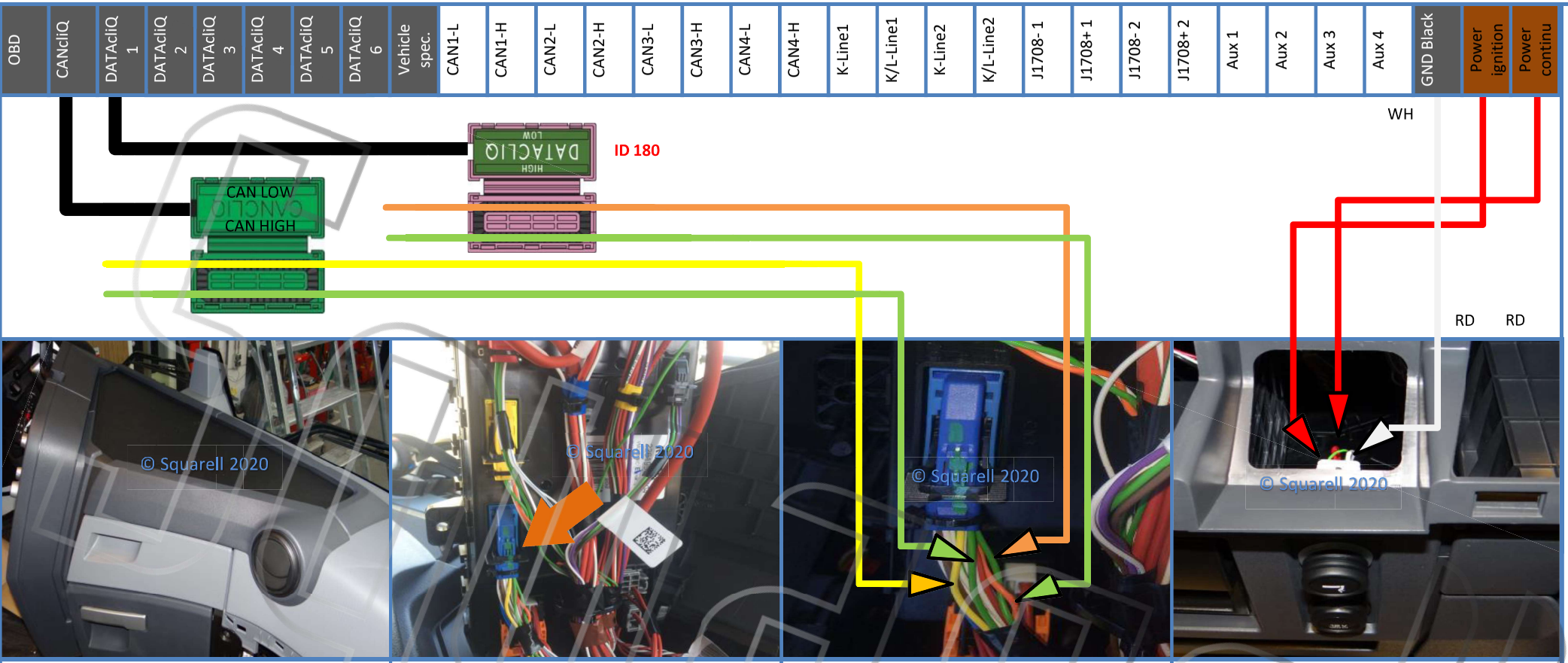

Location

Middle Console under the rubber cover, you will find the fuse box. Open the Fuse box cover with the 2 clips. Unscrew the Fuse box and turn it on its side. There you should see several colored connectors (CN1, CN2, CN3).

Location

Find the Blue Connector (CN3) on the underside of the fuse box.

CANbus

Untwist the Yellow (pin 8) and Green (pin 7) wires .
Place the Green wire in CAN Low slot
Place Yellow wire in CAN High slot
Close CANcliQ.

Second CANbus

Untwist the Orange (pin 4) and Green (pin 5) wires .
Place the Orange wire in CAN High slot
Place Yellow wire in CAN Low slot
Close DatacliQ.

Power + Ground

Several options

Ground (KL31) :
Terminal as in picture (White arrow)

Continuous Power (KL30) :
Terminal as in picture (Red arrow)
Power supply

Power on Ignition (KL15) :
Terminal as in picture (Red arrow)
Cigarette lighter

Warning! CANcliQ or DatacliQ closes only once. Please repower the Squarell Device after the installation is completed. Please connect Squarell devices to a 10V to 48V power supply. Please use certified crimping tools to connect the wires.

Volvo FM (2nd gen Facelift) Euro 6 2013+

A B C D E F G H I J K L M N O P Q R S T U V W X Y Z

Copyright © Squarell 2020

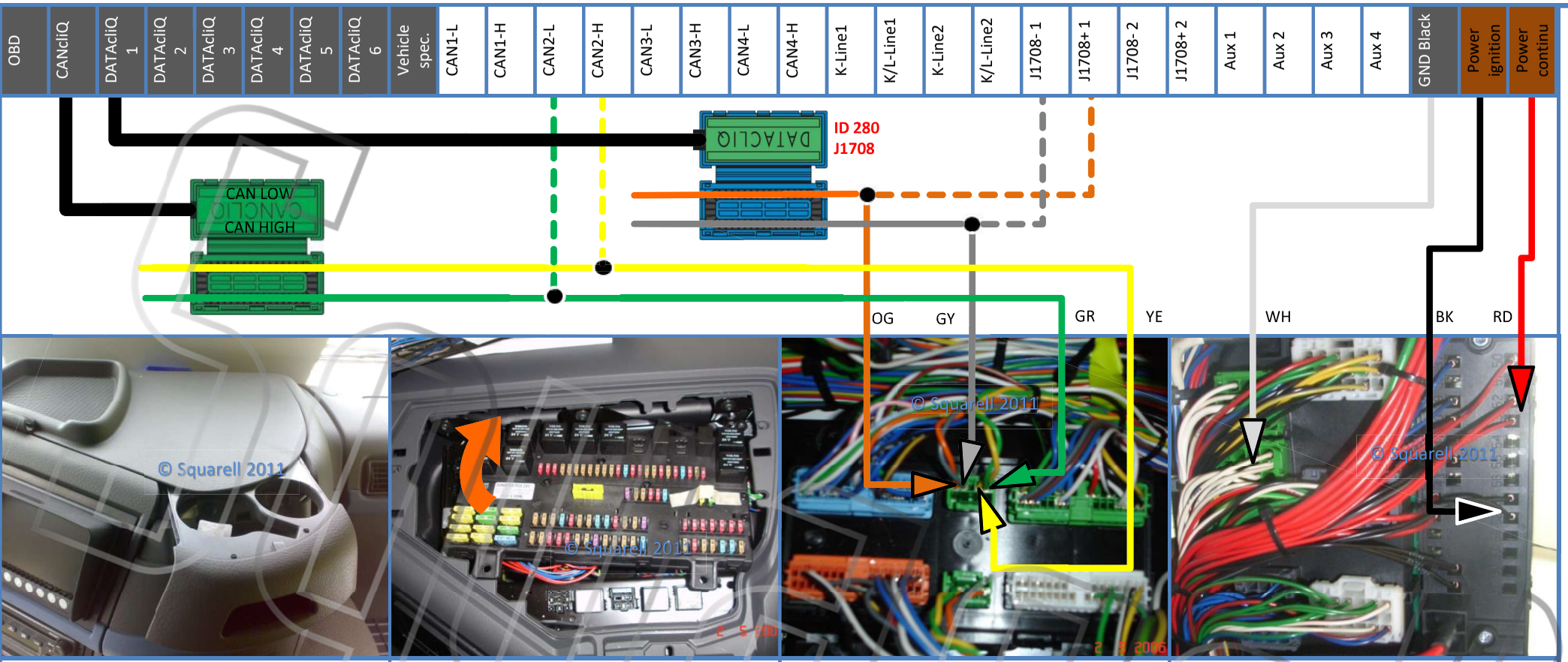

Location

Remove screws at extractable cup holder
Open triangular shaped upper dashboard panel

Remove 4 screws of fuse box
Open fuse box compartment
Find the VECU under the fuse box

CANbus

Untwist Green and Yellow wires,
Place Yellow wire in CAN High slot
Place Green wire in CAN Low slot
Close CANcliQ.

J1708 bus (DatacliQ)
Untwist Grey and Orange wires,
Place Orange wire in High slot
Place Grey wire in low slot
Close DatacliQ.

Power + Ground

Connections at backside of fuse box.

Ground (KL31)
Green connector with white wires (White arrow)

Continuous Power (KL30)
Free terminals "from 50 to 54" (Red arrow).

Power on Ignition (KL15)
Free terminals "from 55 to 62" (Black arrow).

Warning! CANcliQ or DatacliQ closes only once. Please repower the Squarell Device after the installation is completed. Please connect Squarell devices to a 10V to 30V power supply. Please use certified crimping tools to connect the wires.
This vehicle type is not supporting the Total Fuel Used, Engine Coolant Temperature and the Fuel Level on the Direct CANbus. Squarell unit will start counting the Total Fuel Used since the installation. The Engine Coolant Temperature and the Fuel Level can only be supported with a 6628-31 J1708 Diode or FLX12 Flex .

Volvo FMX (1st gen) 2010-2012

Copyright © Squarell 2013

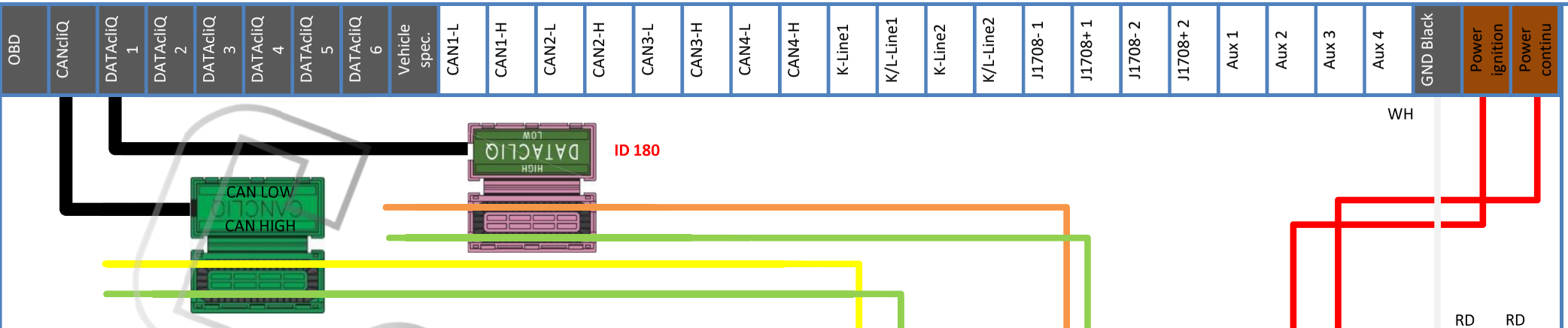

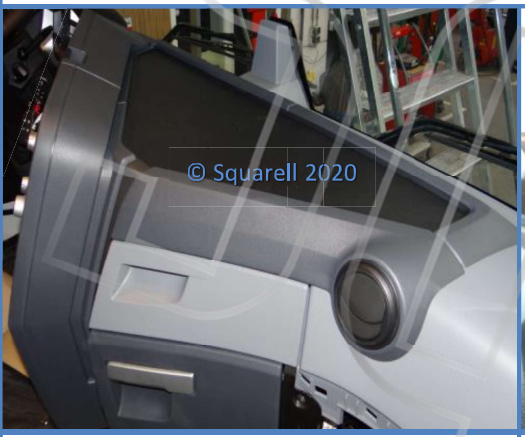

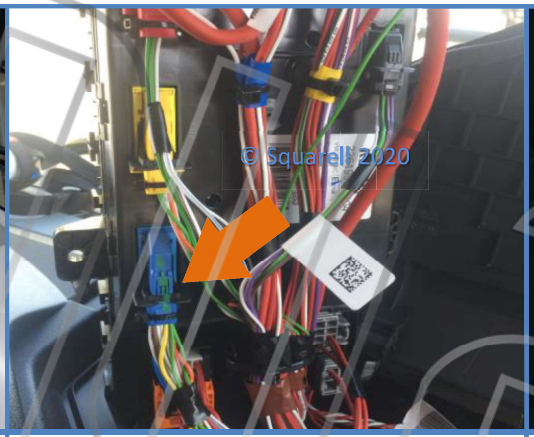

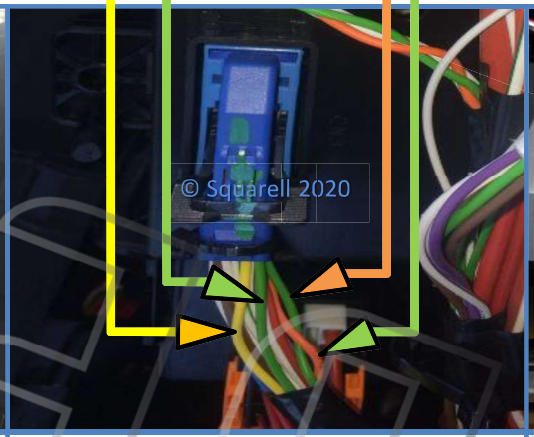

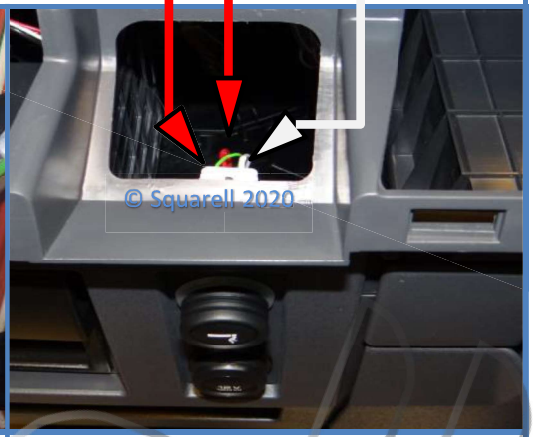

Location

Middle Console under the rubber cover, you will find the fuse box. Open the Fuse box cover with the 2 clips. Unscrew the Fuse box and turn it on its side. There you should see several colored connectors (CN1, CN2, CN3).

Location

Find the Blue Connector (CN3) on the underside of the fuse box.

CANbus

Untwist the Yellow (pin 8) and Green (pin 7) wires .
Place the Green wire in CAN Low slot
Place Yellow wire in CAN High slot
Close CANcliQ.

Second CANbus

Untwist the Orange (pin 4) and Green (pin 5) wires .
Place the Orange wire in CAN High slot
Place Yellow wire in CAN Low slot
Close DatacliQ.

Power + Ground

Several options

Ground (KL31) :
Terminal as in picture (White arrow)

Continuous Power (KL30) :
Terminal as in picture (Red arrow)
Power supply

Power on Ignition (KL15) :
Terminal as in picture (Red arrow)
Cigarette lighter

Warning! CANcliQ or DatacliQ closes only once. Please repower the Squarell Device after the installation is completed. Please connect Squarell devices to a 10V to 48V power supply. Please use certified crimping tools to connect the wires.

Volvo FMX (1st gen Facelift) Euro 6 2013+

A B C D E F G H I J K L M N O P Q R S T U V W X Y Z

Copyright © Squarell 2020